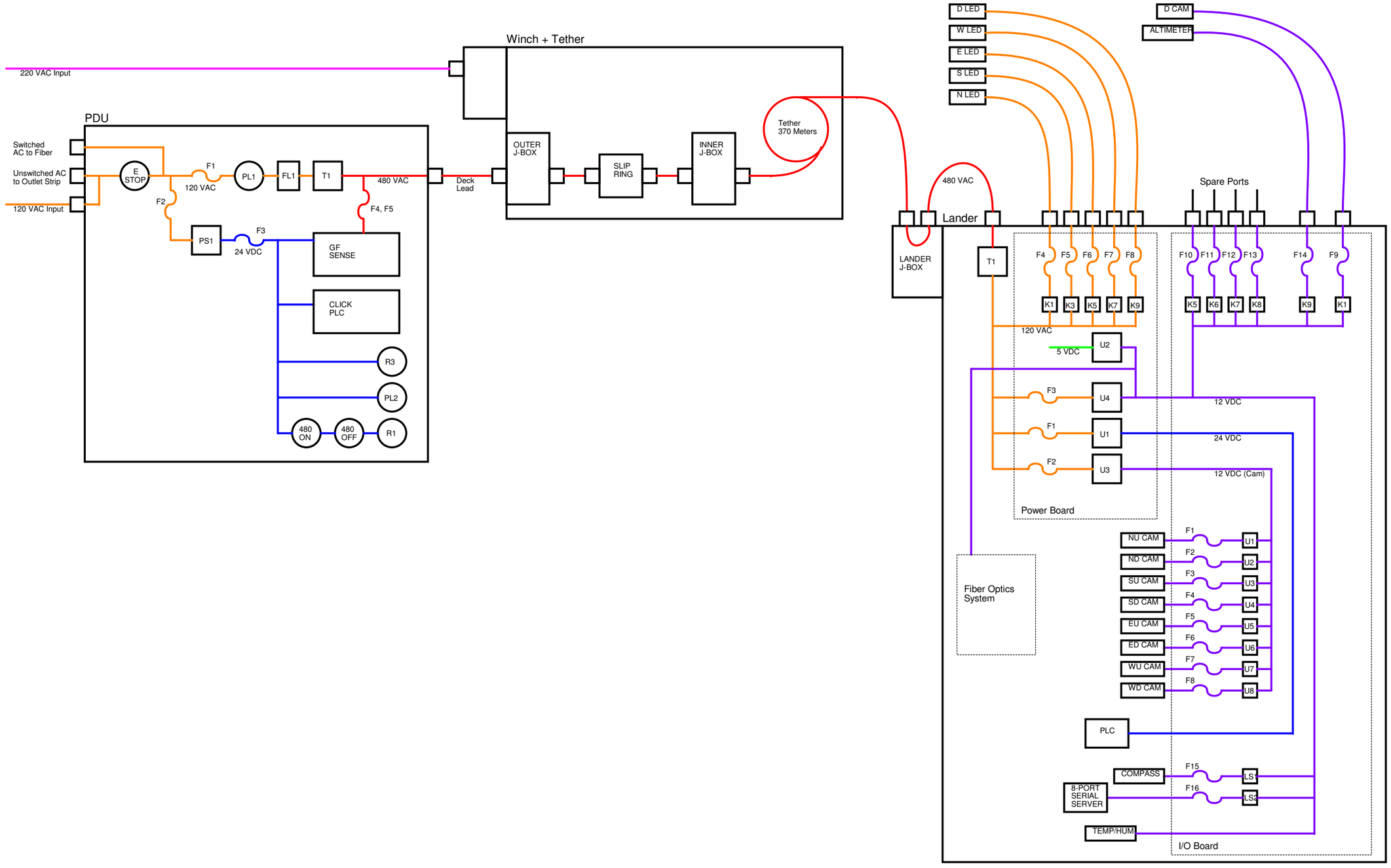

120 VAC
220 VAC
480 VAC

24 VDC
12 VDC
5 VDC

M B A R I	***Monterey Bay Aquarium Research Institute*** **7700 Sandholdt Road, Moss Landing, CA 95039**		
	Title BOSS Power Distribution		
Engineer Kacy	**Size** C	**Document Number** <Doc>	**Layout File** <Layout File>	**Rev** <Rev>
Layout <Layout>	Date: Thursday, May 28, 2020	Sheet 1 of 1	