Multi-Purpose Benthic Observation System
Single Housing & Fiber Tether Option Rev B 12-20-2016

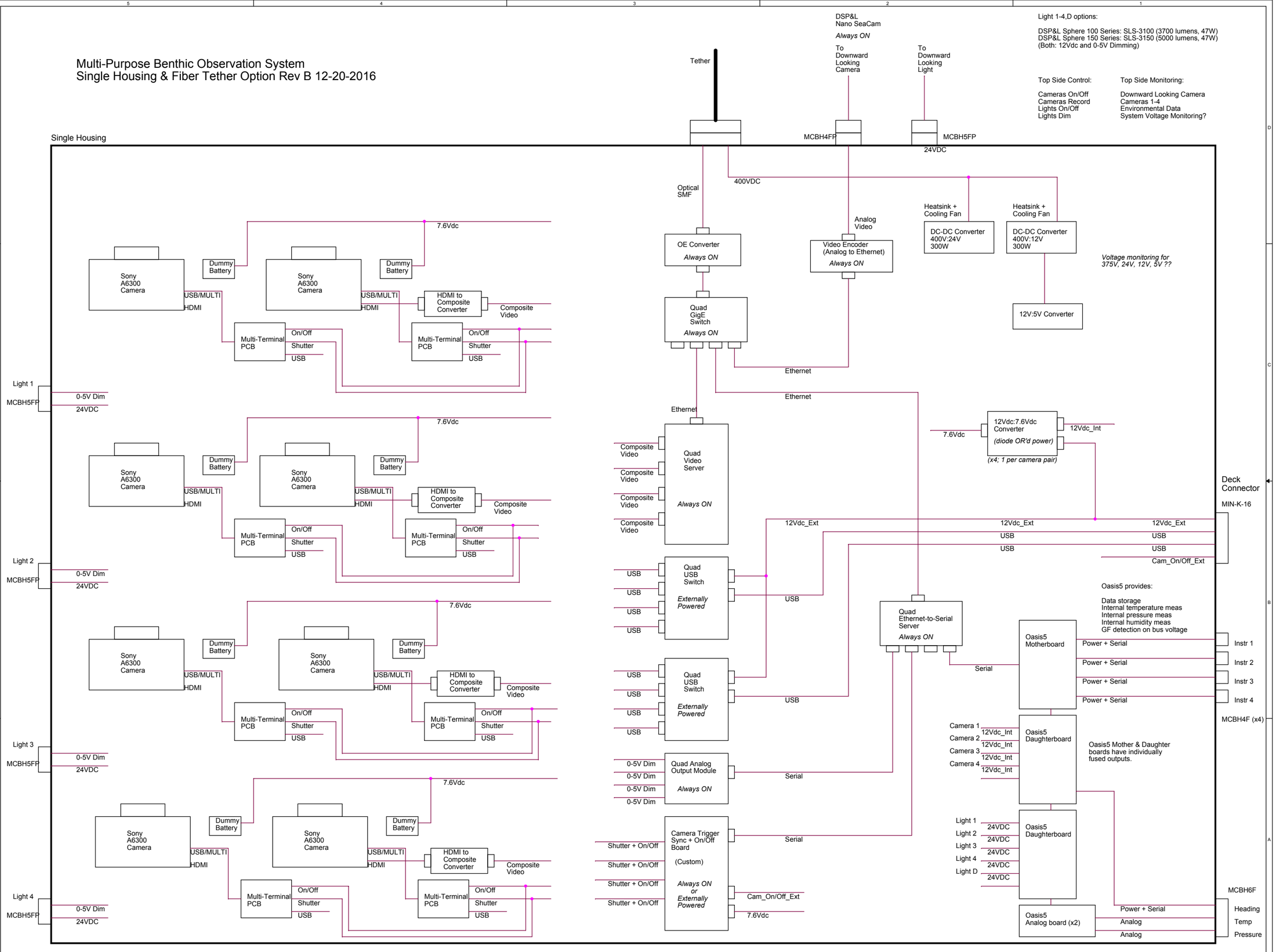

Light 1-4,D options:

DSP&L Sphere 100 Series: SLS-3100 (3700 lumens, 47W)
DSP&L Sphere 150 Series: SLS-3150 (5000 lumens, 47W)
(Both: 12Vdc and 0-5V Dimming)

Top Side Control:

Cameras On/Off
Cameras Record
Lights On/Off
Lights Dim

Top Side Monitoring:

Downward Looking Camera
Cameras 1-4
Environmental Data
System Voltage Monitoring?