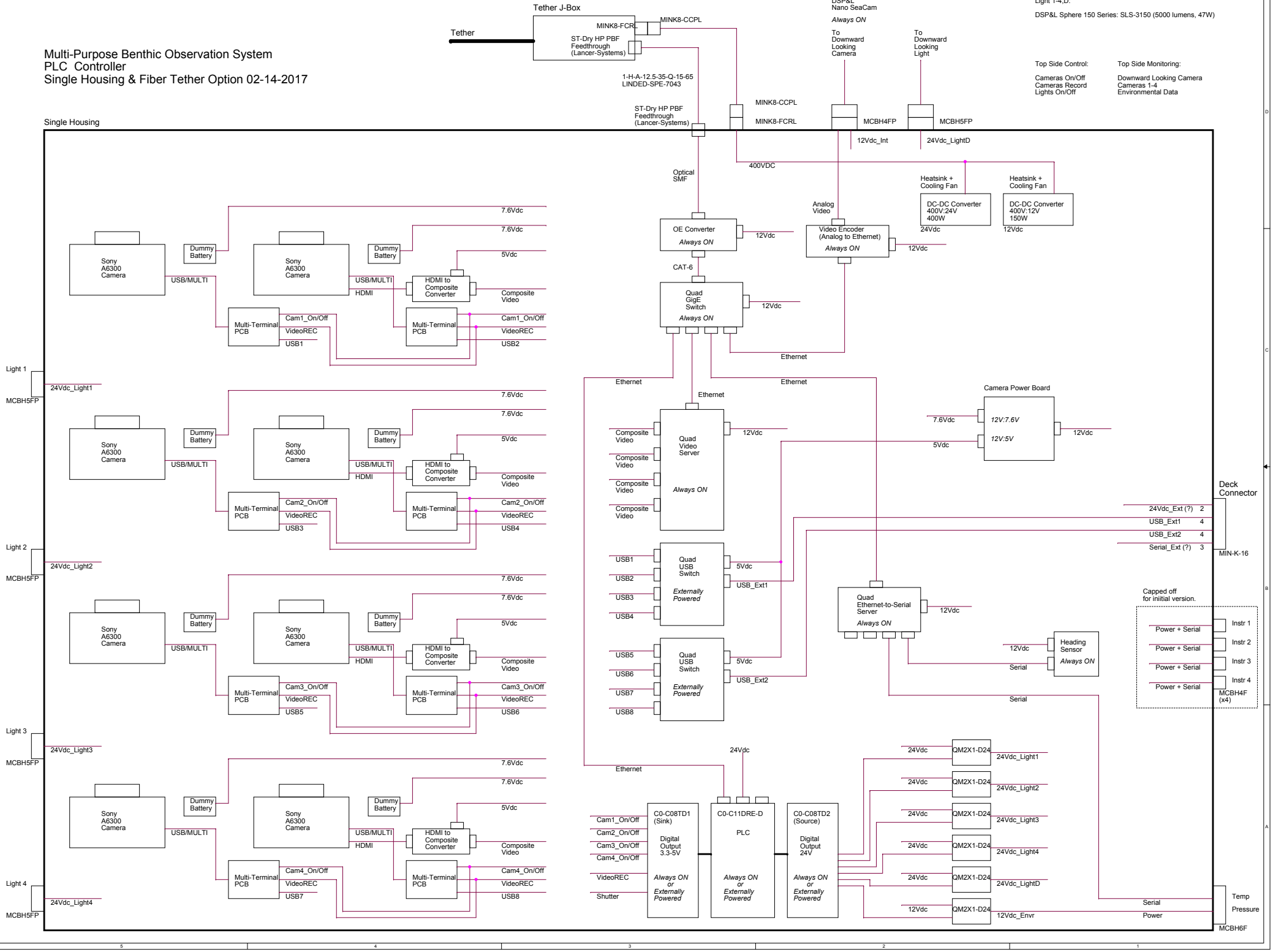Multi-Purpose Benthic Observation System
PLC Controller
Single Housing & Fiber Tether Option 02-14-2017