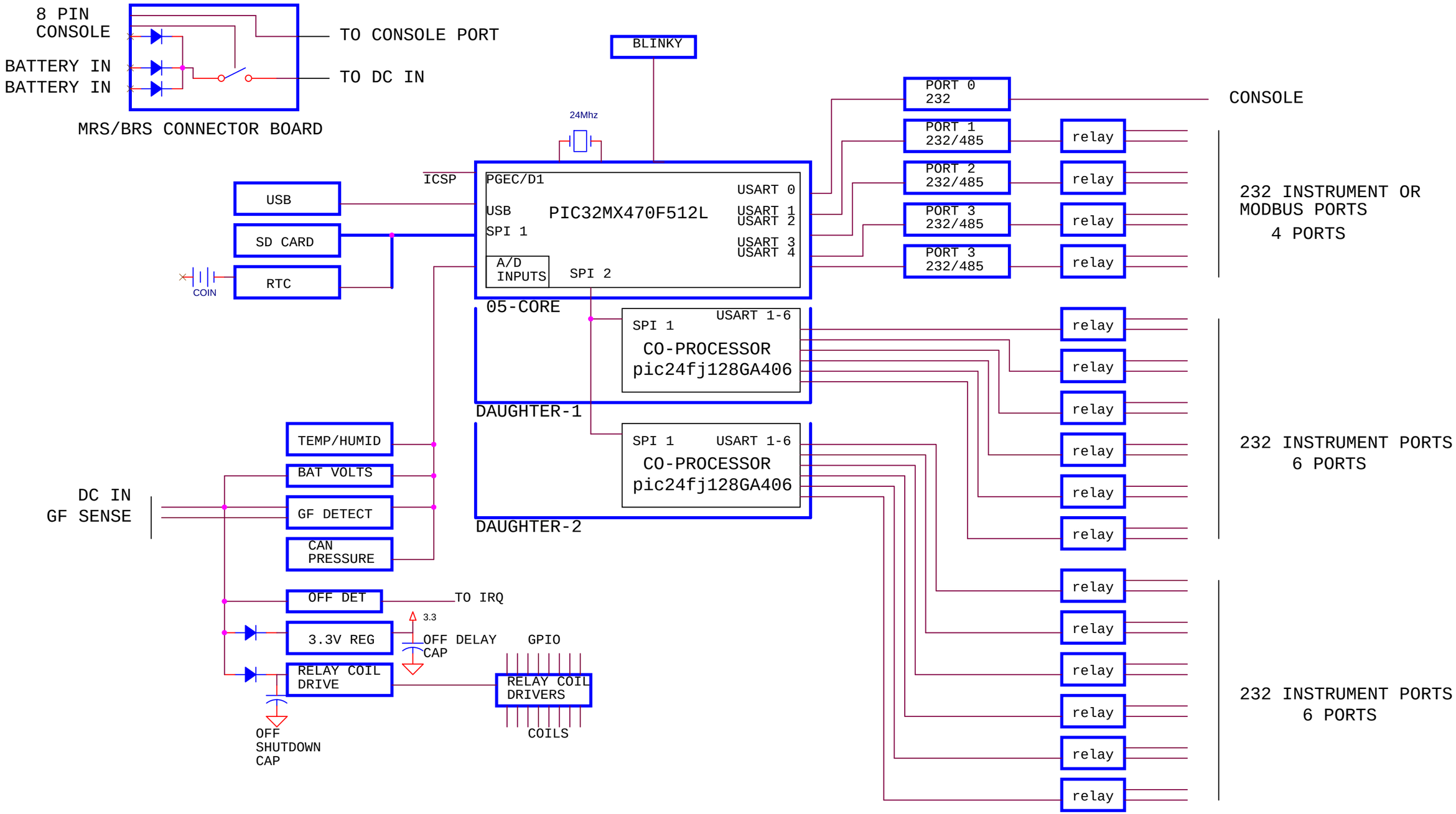

DRAFT 2/8/2016

INITIAL REL 3/19/2015

Title	O5 BLOCK DIAGRAM	
Size B	Document Number <Doc>	Rev -
Date: Monday, February 08, 2016	Sheet 1 of 1	