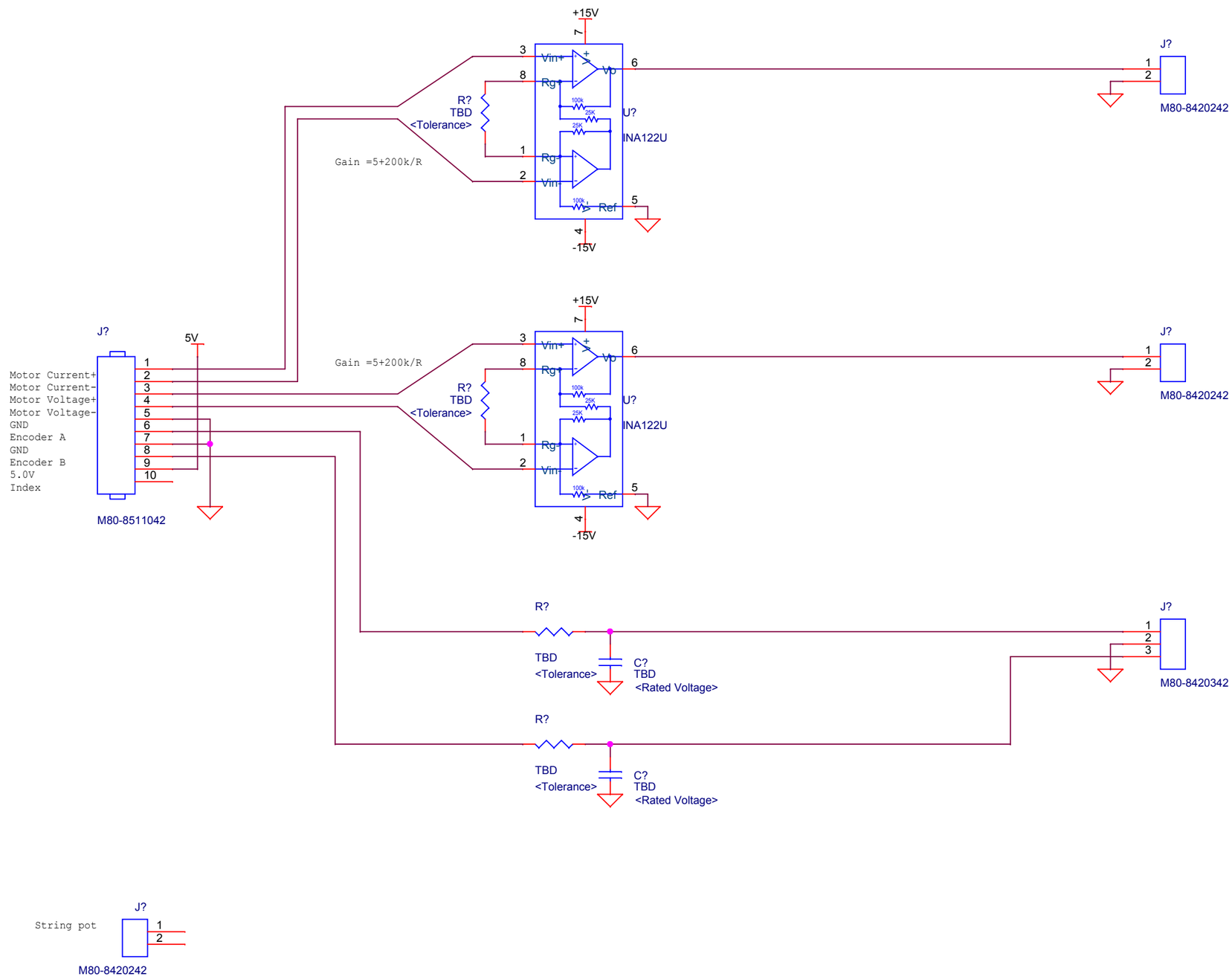





MONTEREY BAY AQUARIUM RESEARCH INSTITUTE
7700 SANDHOLDT ROAD
MOSS LANDING, CA 95039
(831) 775-1700 www.mbari.org
Copyright MBARI 2000

| | | | |
|---|---|---|---|
| Title | Fault Detection Platform Signal Conditioning | | Number <Doc> |
| Size B | Engineer SJensen | Path <Path> | Filename PlatformSensor.opj |
| | Date: Thursday, August 30, 2018 | Sheet 1 of 4 | Rev A |