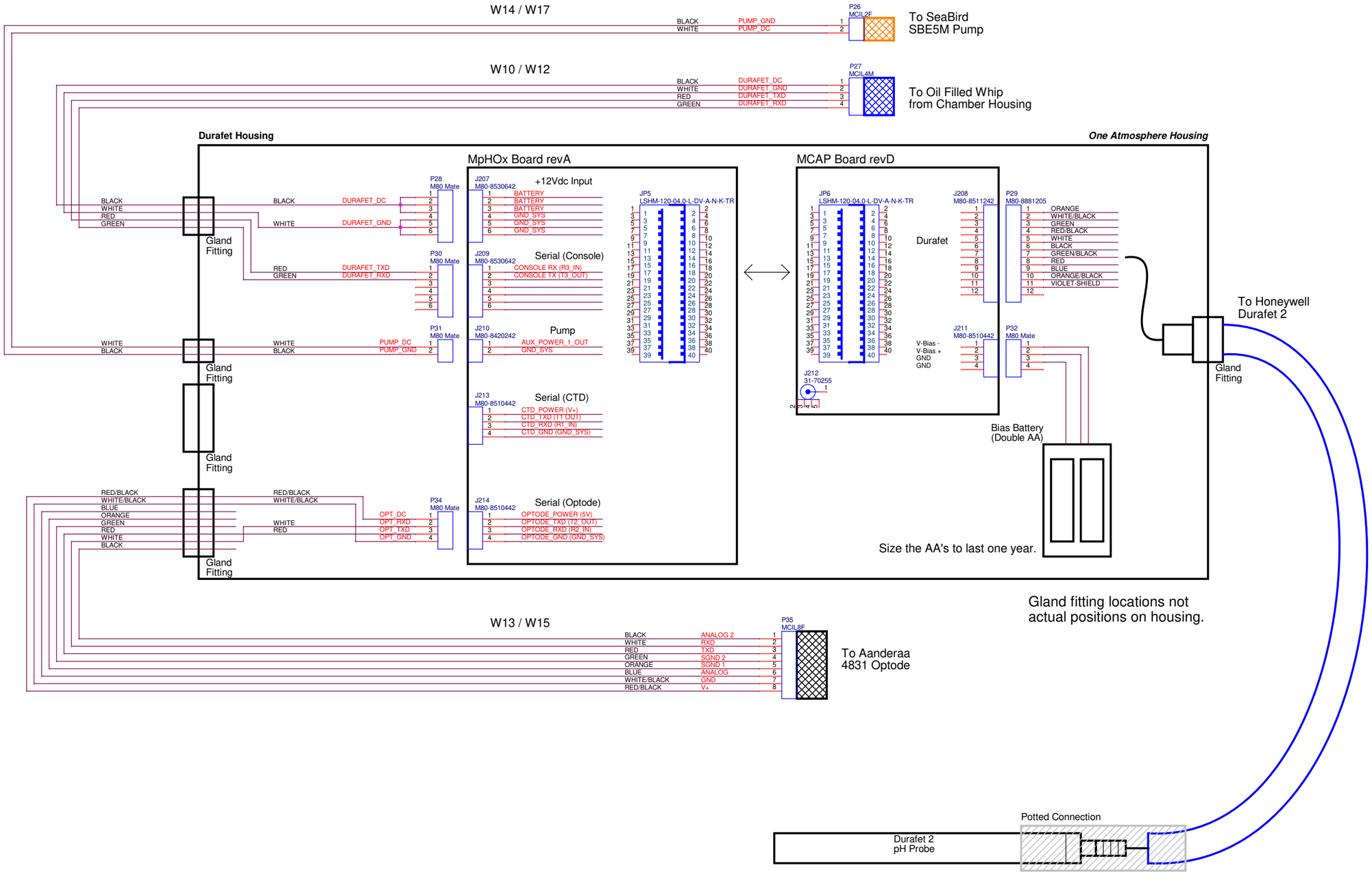

Durafet Housing Version B

Monterey Bay Aquarium Research Institute
7700 Sandholdt Road, Moss Landing, CA 95039

Schematic Name: 02 - Housings			
Page Title: 09b - Durafet Housing B WD			Engineer: <Engineer>
Project Name: <Project Name>			Designer: <Designer>
Group Name: <Group>	System: <System>	Subsystem: <Subsystem>	Last Updated By: <Updated By>
Drawing Number: <MBARI DN>	Release: <RevVersion: <Version>	Status: <Status>	Size: C
Page Modify Date: Friday, February 19, 2021	Check In Date: <LCID>	Sheet <PageNumber> of <Page Count>	