Electrical Schematic

Rotasyn Resolver

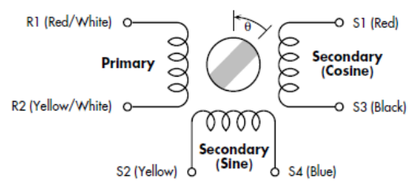

$V_{(S1-S3)} = V_{(R1-R2)} \times TR \times \cos(\theta)$

$V_{(S2-S4)} = V_{(R1-R2)} \times TR \times \sin(\theta)$

θ increases for CCW rotation when viewed from lead exit end

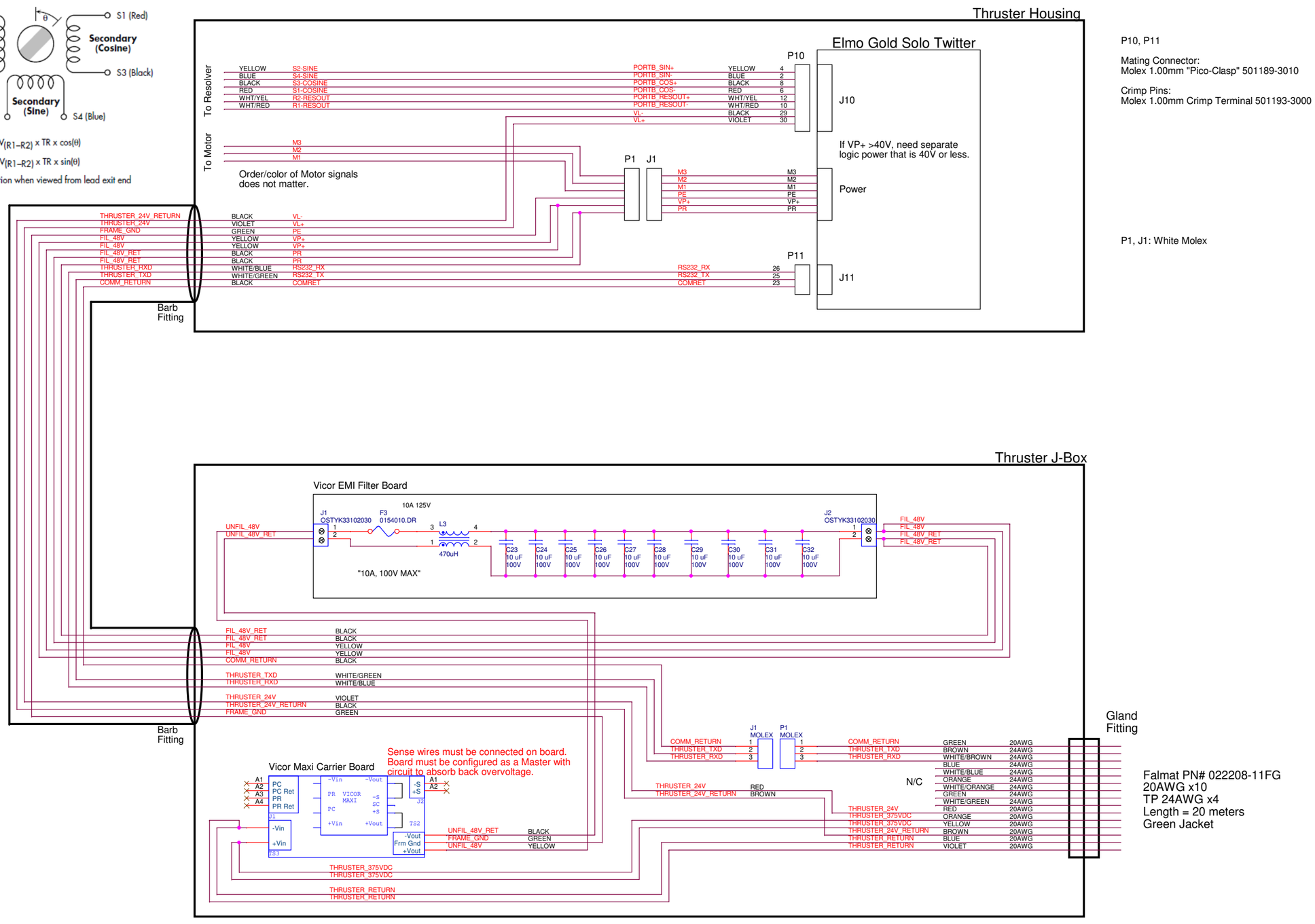

P10, P11

Mating Connector:
Molex 1.00mm "Pico-Clasp" 501189-3010

Crimp Pins:
Molex 1.00mm Crimp Terminal 501193-3000

P1, J1: White Molex

Falmat PN# 022208-11FG
20AWG x10
TP 24AWG x4
Length = 20 meters
Green Jacket

Monterey Bay Aquarium Research Institute
7700 Sandholdt Road, Moss Landing, CA 95039

Schematic Name: 02 - Housings			
Page Title: 08a - Thruster Housing New Elmo			Engineer: <Engineer>
Project Name: <Project Name>	<Group>		Designer: <Designer>
Group Name: <System>	System:	Subsystem: <Subsystem>	Last Updated By: <Updated By>
Drawing Number: <MBARI DN>	Release: <RevVersion: <Version>		Status: <Status> / Size: C
Page Modify Date: Friday, July 16, 2021	Check In Date: <LCID>		Sheet <PageNumber> of <Page Count>