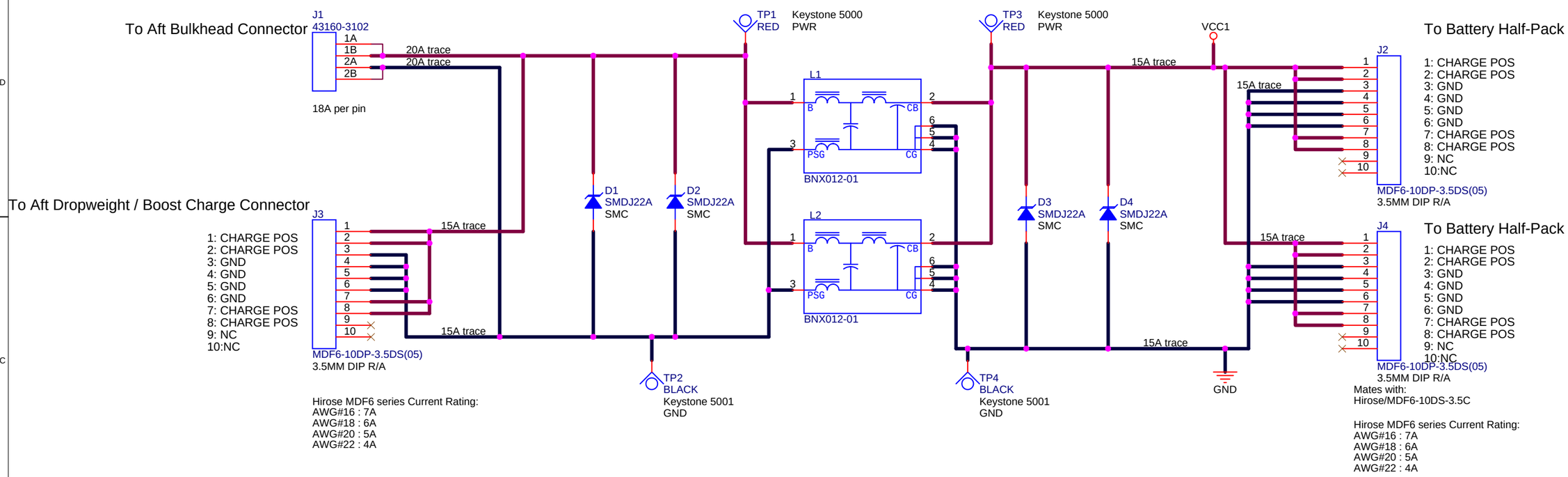

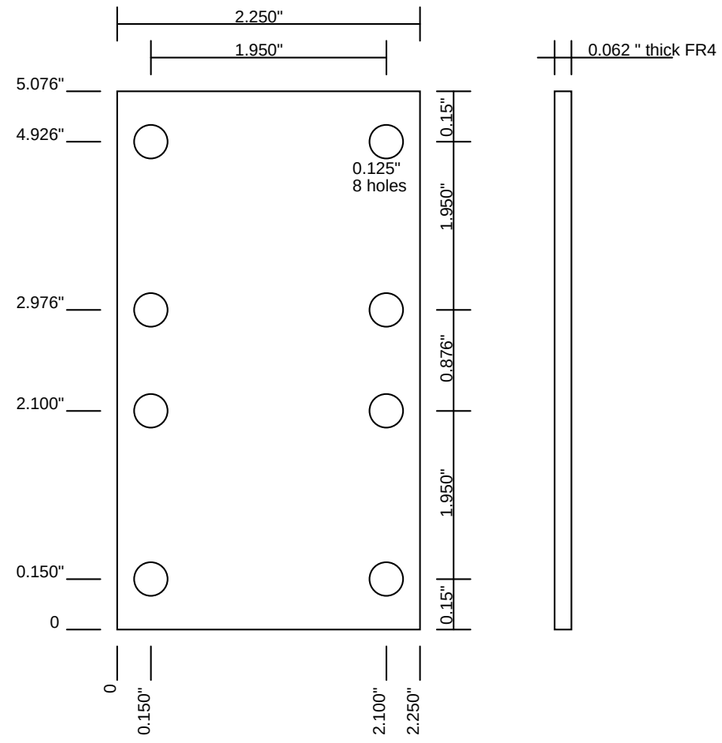

RevA(07/24/2014): Initial Release

Monterey Bay Aquarium Research Institute 7700 Sandholdt Rd, Moss landing CA 95076			
Engineer Klimov 831-775-1914	Page Title LRAUV Power Interface Board		Project: 901400
Size B	Doc. or Part Number <Doc>	File Name (auto) *10021057-PIB1*	Rev A
Page Modify Date (auto): *Thursday, August 14, 2014* Design Modify Date (auto): *Thursday, August 14, 2014*		Sheet: 1 of 1	
Full path (auto): *X:\900739.LRAUV\PROJECT.DRAWINGS\PROJECT.EE.DWGS\BATTERYPACK2013\10021057-PIB1\10021057-PIB1.DSN*			