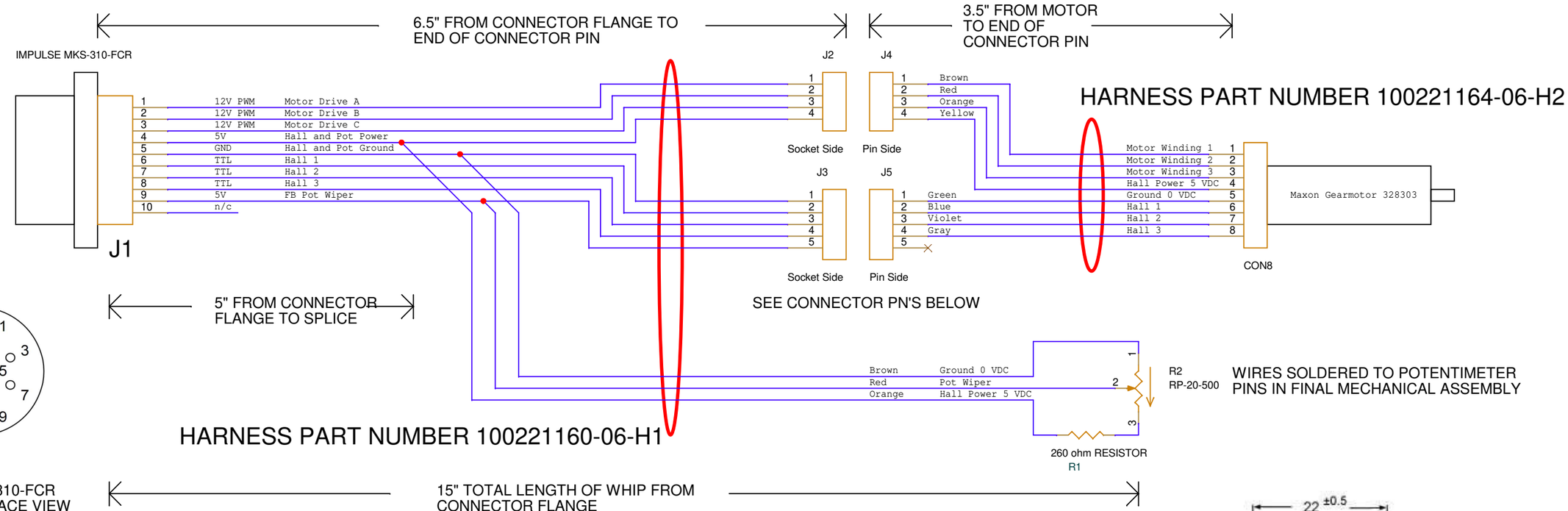

ASSEMBLY NOTES:
1. MBARI TO SUPPLY R1 RESISTOR, MKS-310-FCR, MAXON MOTOR AND R2 POTENTIMETER.
2. ALL WIRES 24AWG TEFLON INSULATION.
2. LEAVE WHIP TO POTENTIMETER UNTERMINATED (SOLDERED TO RESISTOR AND POT IN FINAL MECHANICAL ASSEMBLY).

PARTS REFERENCE SHOWN BELOW FOR MOLEX J2, J3, J4 AND J5 FOR LISTING ON BOM:

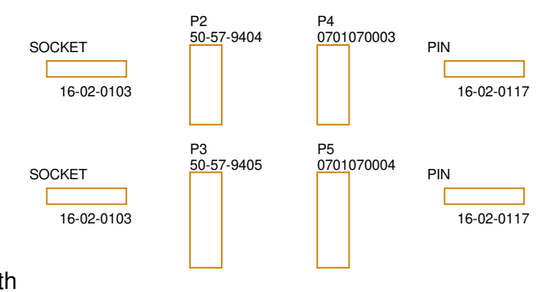

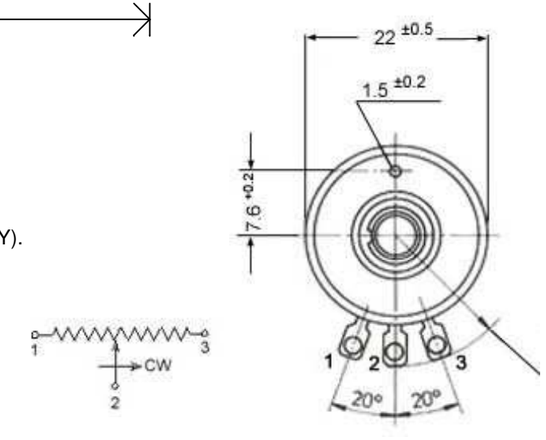

POTENTIMETER PIN NUMBERING VIEWED FROM SHAFT END

Rev B: Changed wire color to encoder and added 260 ohm resistor.
REV. C - 30MAY17 MRC Added wire lengths and assembly instructions for LRAUV5 build.

(c) MBARI 2017 MBARI provides the documentation and materials "as is", with no warranty, express or implied, as to title, non-infringement of third party rights, merchantability, or fitness for any particular purpose, or the performance or results which you may obtain from their use. You assume the entire risk associated with use.

Title	LRAUV CS Actuator Internal Wiring	
Size B	Document Number 100221160-06-C	Rev C
Date: Thursday, August 02, 2018	Sheet 6 of 16	