THE INFORMATION CONTAINED IN THIS DRAWING IS THE SOLE PROPERTY OF MBARI ANY REPRODUCTION IN PART OR WHOLE WITHOUT THE WRITTEN PERMISSION OF MBARI IS PROHIBITED.

REVISIONS

REV.	DESCRIPTION	DATE	APPROVED
	INITIAL RELEASE	7/27/2020	

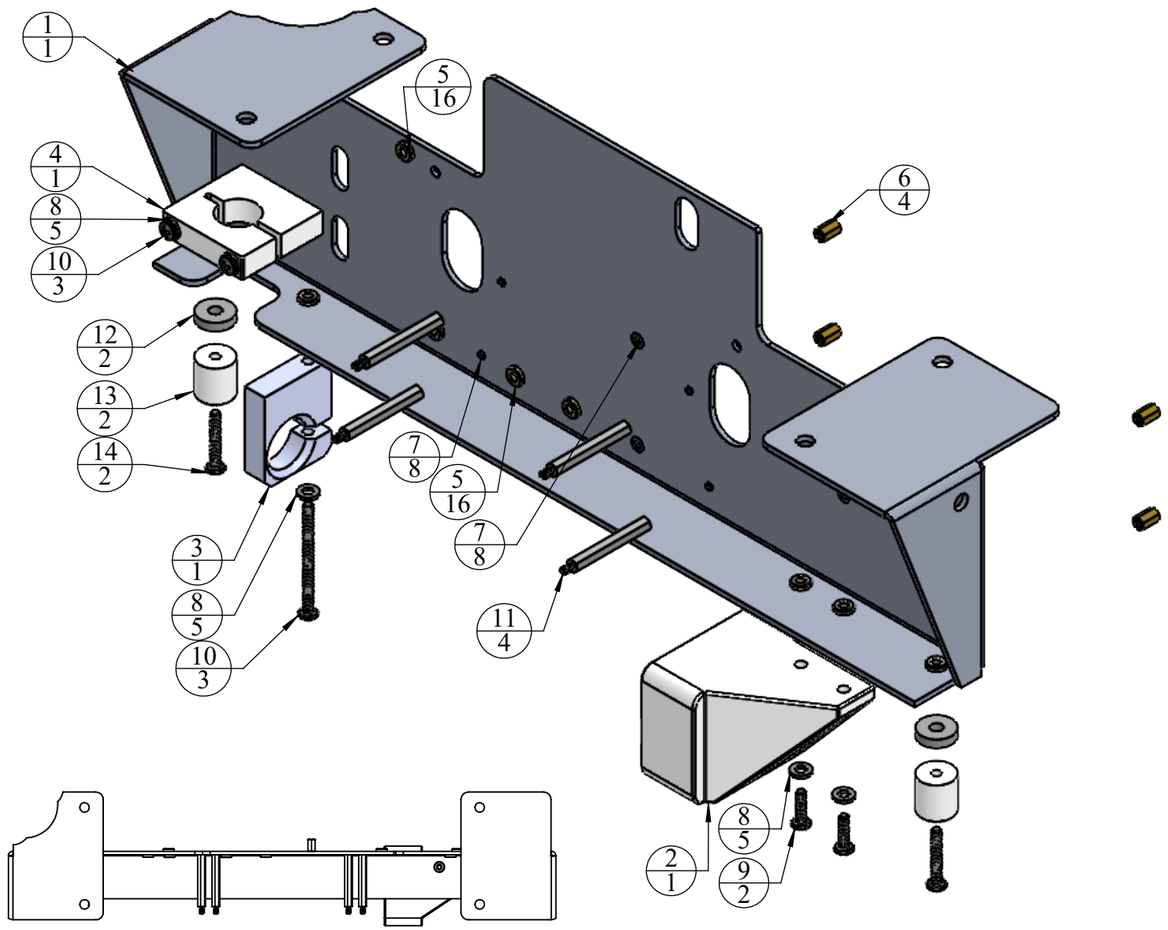

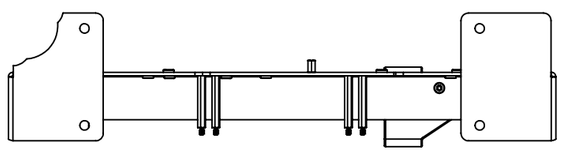

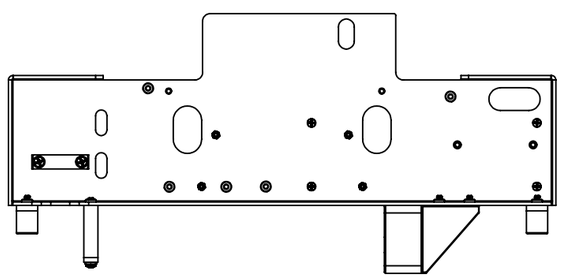

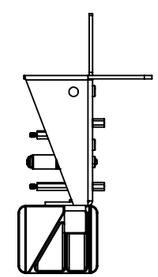

ITEM NO.	PART NUMBER	DESCRIPTION	QTY.
1	DIC PCO2 mounting plate		1
2	DIC PCO2 standard tank end mount block		1
3	DIC PCO2 standard tank nose mount block		1
4	DIC PCO2 valve mount block		1
5	PEM S-632-0 ZI--N		16
6	90308A607		4
7	91771A103		8
8	98019A314		5
9	91772A148		2
10	91772A158		3
11	91075A238		4
12	90131A101		2
13	DIC PCO2 bottom bumper		2
14	91772A152		2

BILL OF MATERIALS

Shop / Q.C.

Inspector

Shop Foreman

Engineer

NEXT ASSY Description | NEXT ASSY Number

Application

UNLESS OTHERWISE SPECIFIED TOLERANCES ARE:

1 PLACE DIM	2 PLACE DIM	3 PLACE DIM	ANGLES
±1/16	±.02	±.005	±1°

1. DIMENSIONS ARE IN INCHES
2. DIMENSION LIMITS HELD AFTER PLATING.
3. REMOVE BURRS AND SHARP EDGES .015 MAX.
4. MACHINED FILLET RADII .0150-.030.
5. MACHINED DIAMETERS ON A COMMON CENTERLINE CONCENTRIC WITHIN .OO5
6. PERPENDICULARITY & PARALLELISM OF MACHINED SURFACES .002 PER INCH. MAX .012 INCHES FOR SINGLE SURFACE.

DO NOT SCALE DRAWING

APPROVALS		DATE
DRAWN	C OKUDA	7/27/2020
ENGINEER	C OKUDA	7/27/2020
CHECKED		
PROJECT NO.	901803	
PROJECT	CARBON Waveglider	
WEIGHT		

Monterey Bay Aquarium Research Institute
MBARI
7700 Sandholdt RD.
Moss Landing, CA 95039
PH: (831) 775-1700

DIC PCO2 INTERNAL CHASSIS ASSY

SIZE B | DWG. NO. XXXXDWG | REV.

SCALE 1:4 | CAD FILE: MECH ENG ON TORNADO | SHEET 1 OF 1