THE INFORMATION CONTAINED IN THIS DRAWING IS THE SOLE PROPERTY OF MBARI ANY REPRODUCTION IN PART OR WHOLE WITHOUT THE WRITTEN PERMISSION OF MBARI IS PROHIBITED.

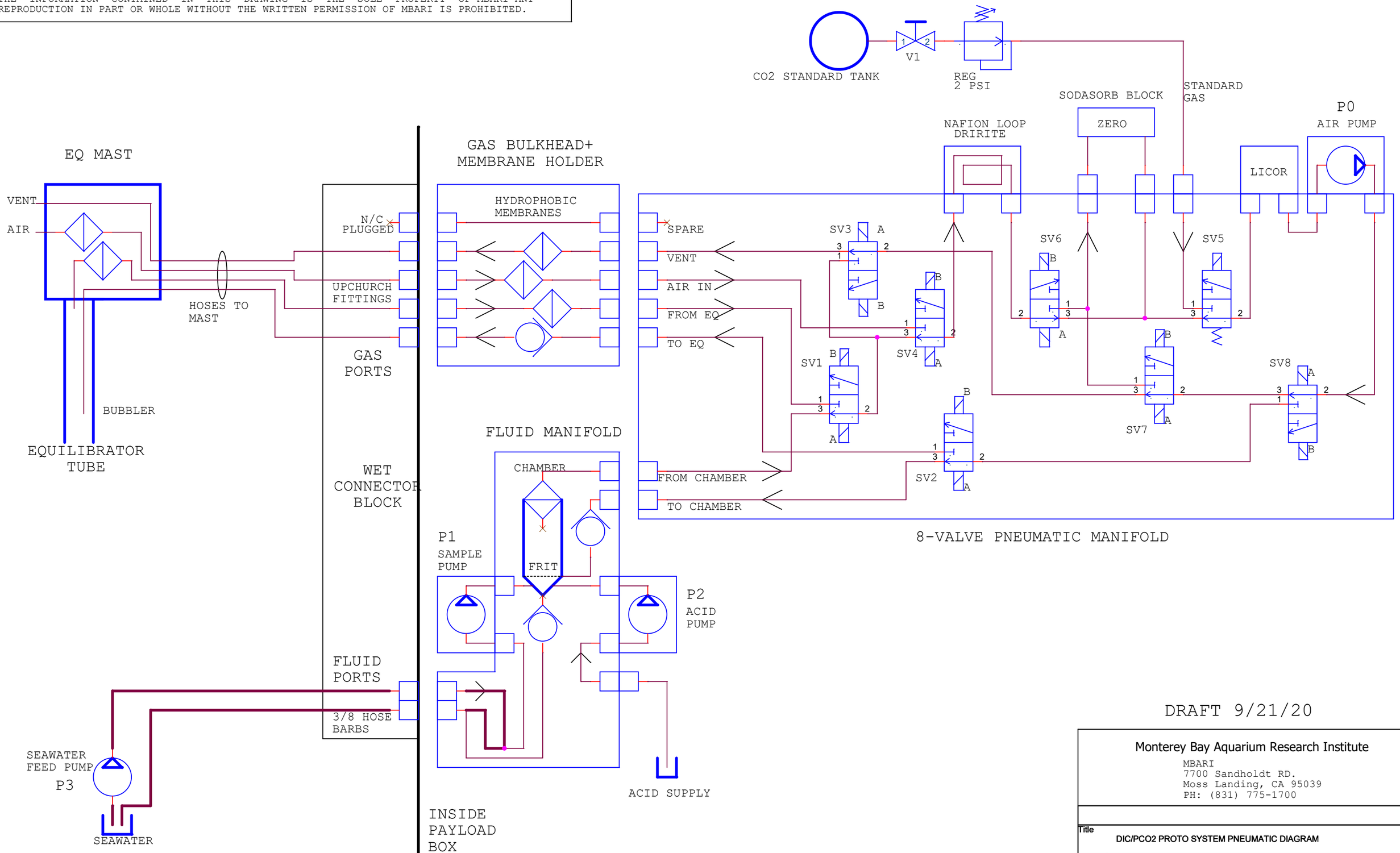

DRAFT 9/21/20

REV-A, 9/16/2020, FIX SV3 A/B LABEL

Monterey Bay Aquarium Research Institute
MBARI
7700 Sandholdt RD.
Moss Landing, CA 95039
PH: (831) 775-1700

Title	DIC/PCO2 PROTO SYSTEM PNEUMATIC DIAGRAM	
Size B	Document Number <Doc>	Rev A
Date: Monday, September 21, 2020	Sheet 1 of 1	