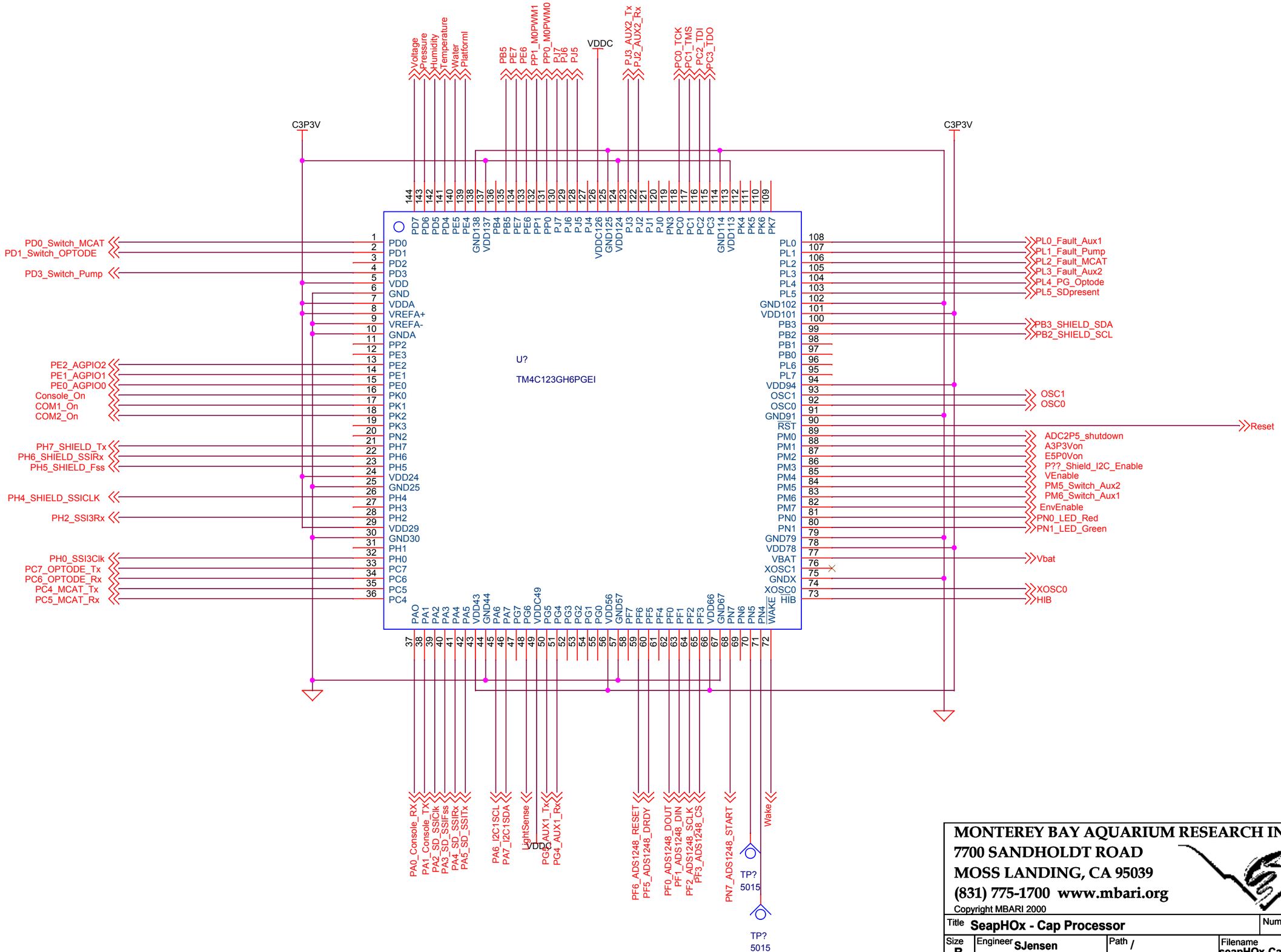

MONTEREY BAY AQUARIUM RESEARCH INSTITUTE
7700 SANDHOLDT ROAD
MOSS LANDING, CA 95039
(831) 775-1700 www.mbari.org

Copyright MBARI 2000

Title SeapHOx - Cap Processor			Number <Doc>
Size B	Engineer SJensen	Path /	Filename seapHOx-Cap.opj
	Date: Tuesday, October 03, 2017	Sheet 1 of 1	Rev 0.0.0

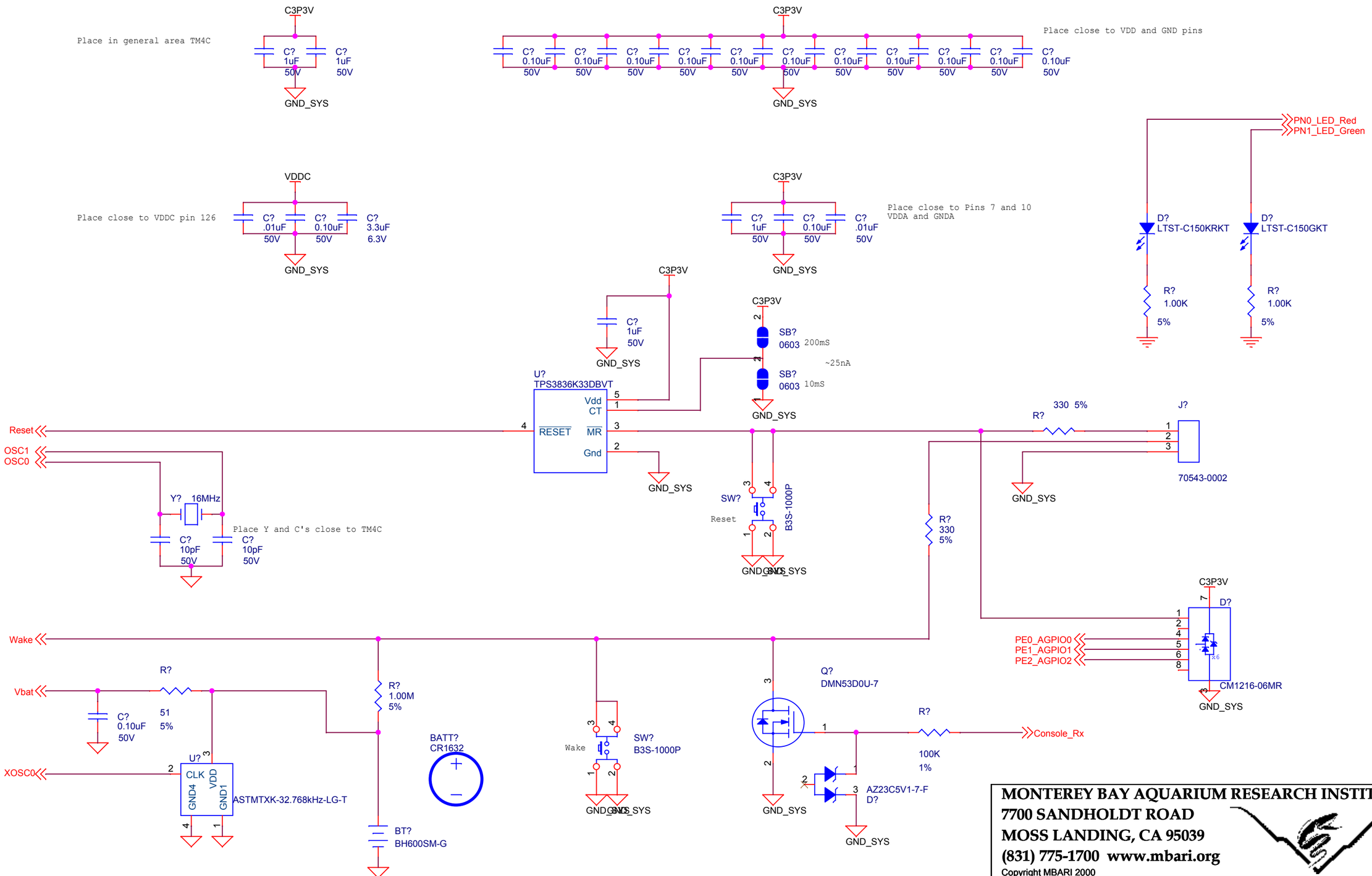

MONTEREY BAY AQUARIUM RESEARCH INSTITUTE
7700 SANDHOLDT ROAD
MOSS LANDING, CA 95039
(831) 775-1700 www.mbari.org

Copyright MBARI 2000

Title **SeapHOx - Cap Processor Bypass**			Number **<Doc>**
Size **B**	Engineer **SJensen**	Path **/**	Filename **seapHOx-Cap.opj**
	Date: Tuesday, October 16, 2018	Sheet 1 of 1	Rev **0.0.0**

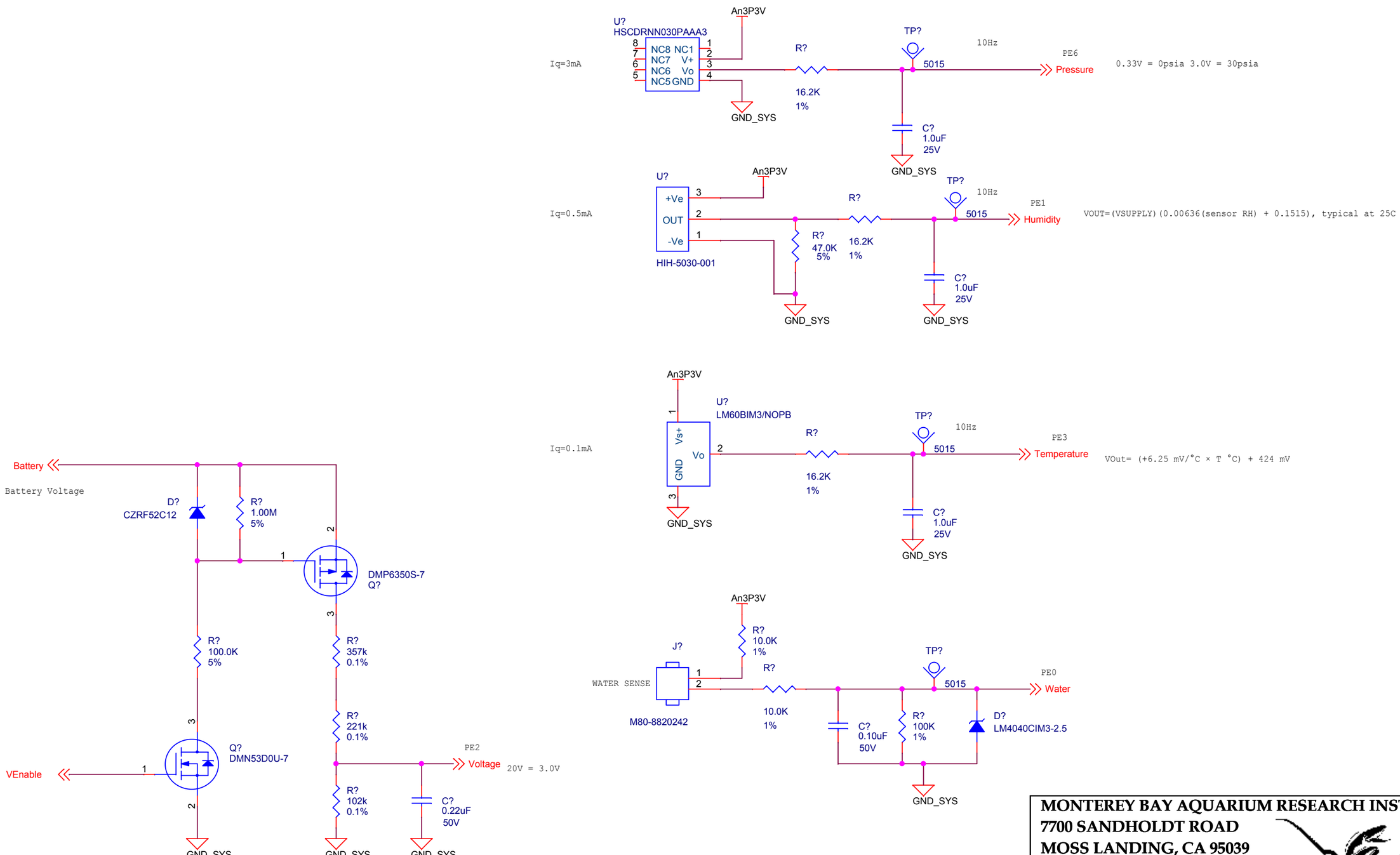

MONTEREY BAY AQUARIUM RESEARCH INSTITUTE
7700 SANDHOLDT ROAD
MOSS LANDING, CA 95039
(831) 775-1700 www.mbari.org

Copyright MBARI 2000

Title **SeapHOx**			Number **<Doc>**
Size **B**	Engineer **SJensen**	Path **/**	Filename **seapHOx-Cap.opj**
	Date: Wednesday, November 07, 2018	Sheet 1 of 1	Rev **1.0.0**

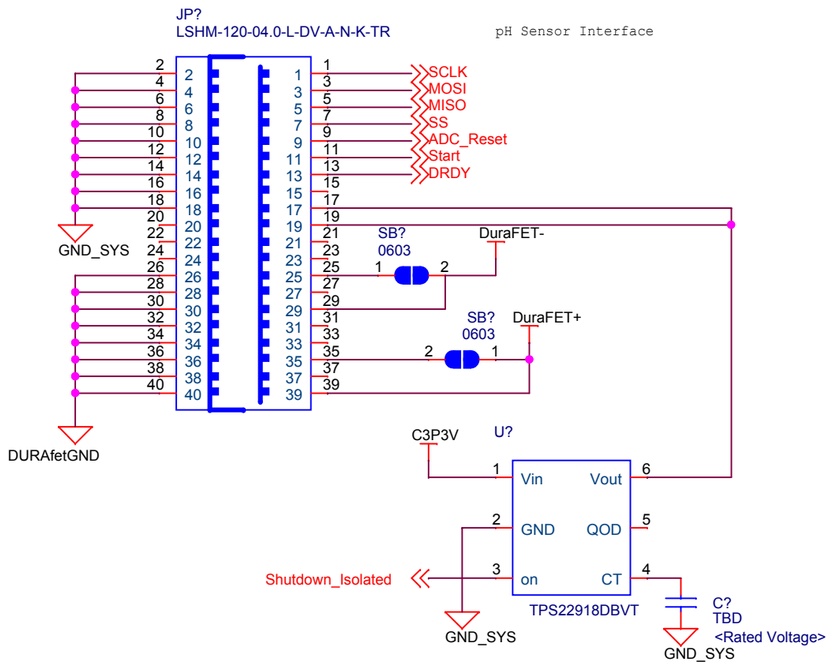

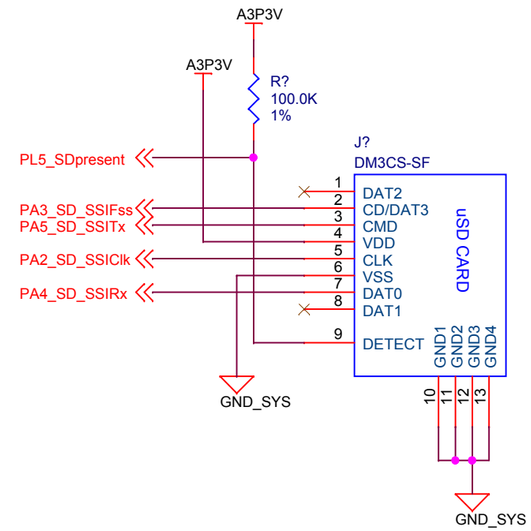

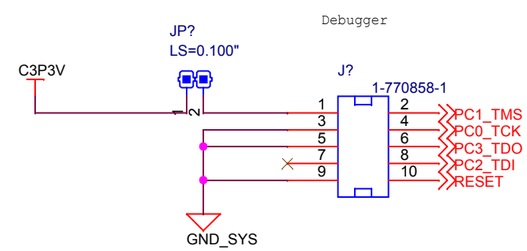

MONTEREY BAY AQUARIUM RESEARCH INSTITUTE
7700 SANDHOLDT ROAD
MOSS LANDING, CA 95039
(831) 775-1700 www.mbari.org
Copyright MBARI 2000

Title SeapHOx				Number <Doc>
Size B	Engineer SJensen	Path /	Filename seapHOx-Cap.opj	Rev 1.0.0
	Date: Wednesday, November 07, 2018		Sheet 1 of 1	

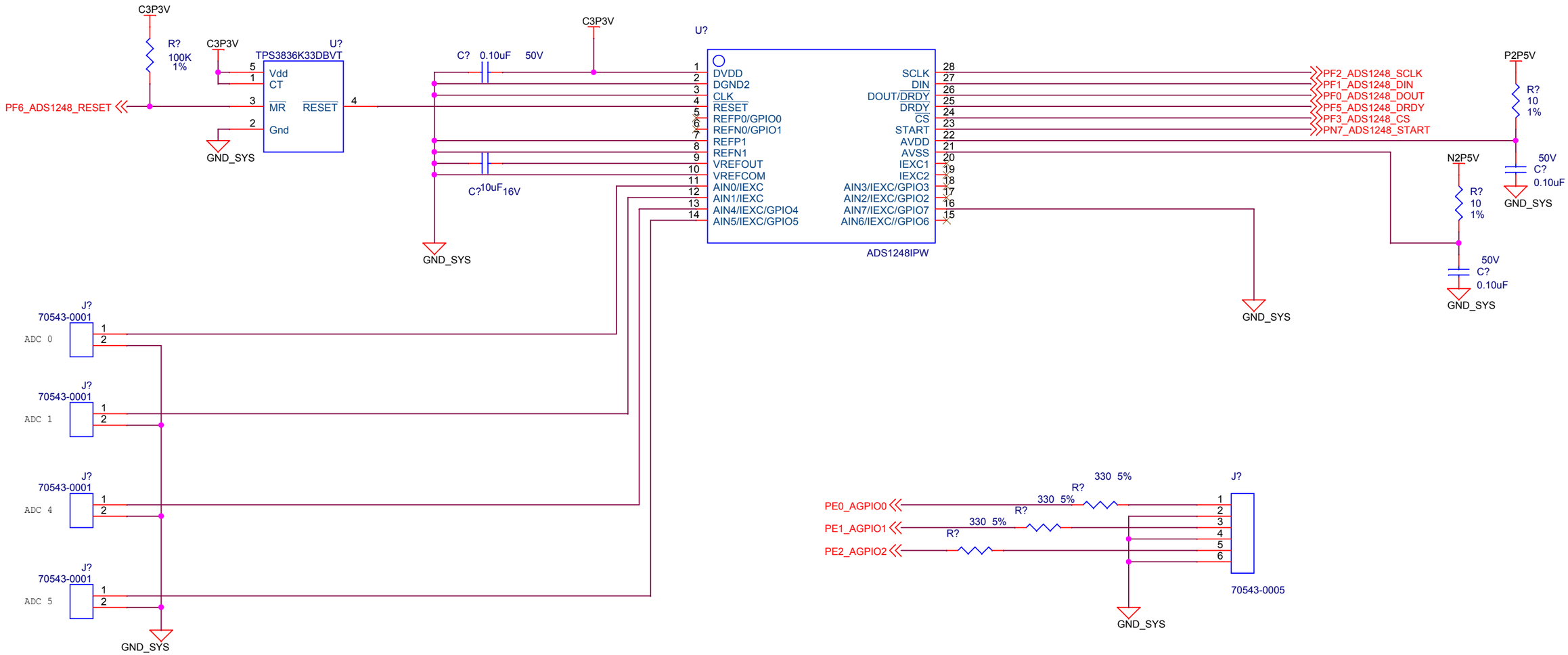

MONTEREY BAY AQUARIUM RESEARCH INSTITUTE
7700 SANDHOLDT ROAD
MOSS LANDING, CA 95039
(831) 775-1700 www.mbari.org

Copyright MBARI 2000

Title **SeapHOx**			Number **<Doc>**
Size **B**	Engineer **SJensen**	Path **/**	Filename **seapHOx-Cap.opj**	Rev **1.0.0**
	Date: Tuesday, October 03, 2017	Sheet 1 of 1	

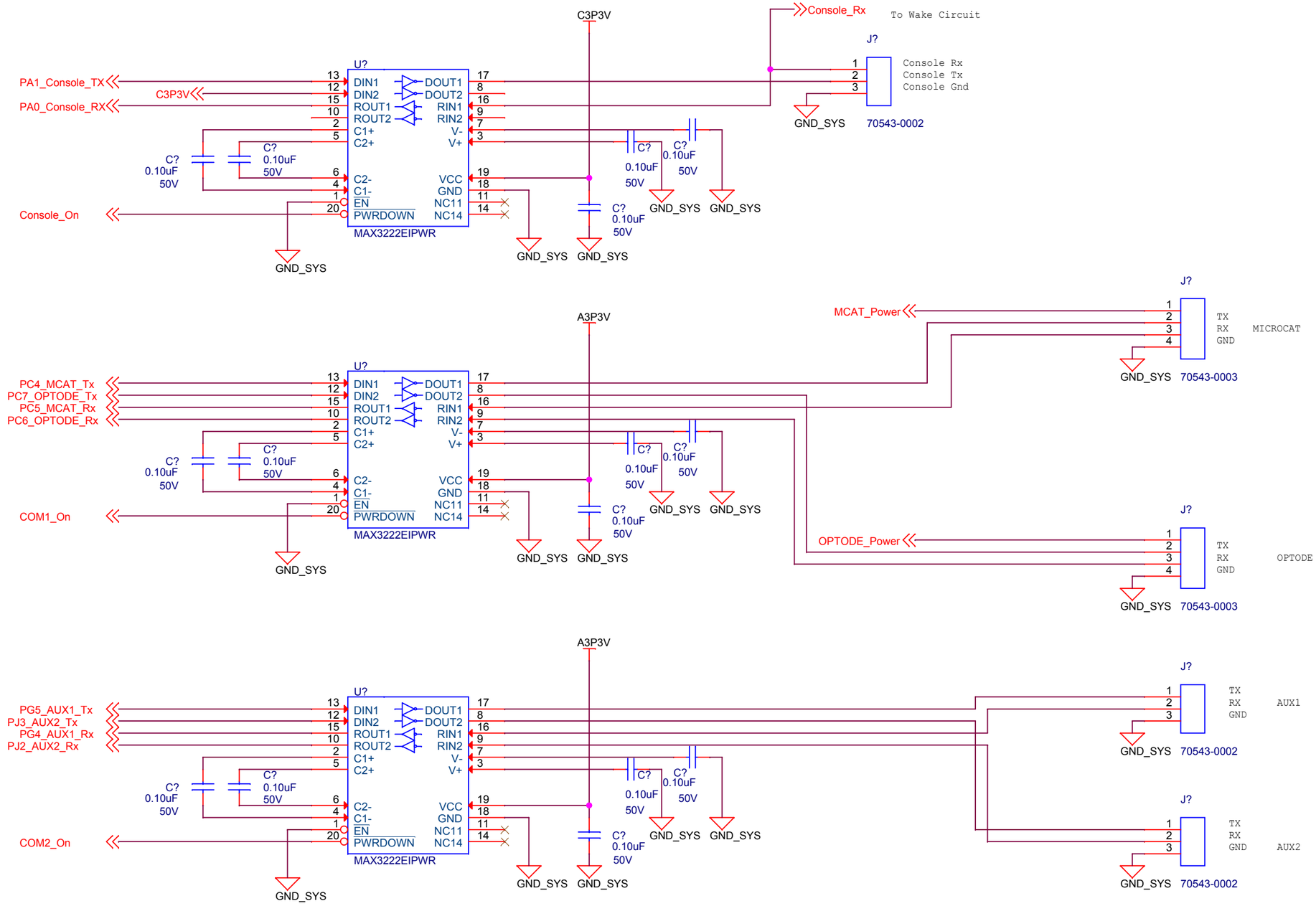

MONTEREY BAY AQUARIUM RESEARCH INSTITUTE
7700 SANDHOLDT ROAD
MOSS LANDING, CA 95039
(831) 775-1700 www.mbari.org

Copyright MBARI 2000

Title SeapHOx			Number <Doc>
Size B	Engineer SJensen	Path /	Filename seapHOx-Cap.opj
	Date: Wednesday, October 04, 2017	Sheet 1 of 1	Rev 1.0.0

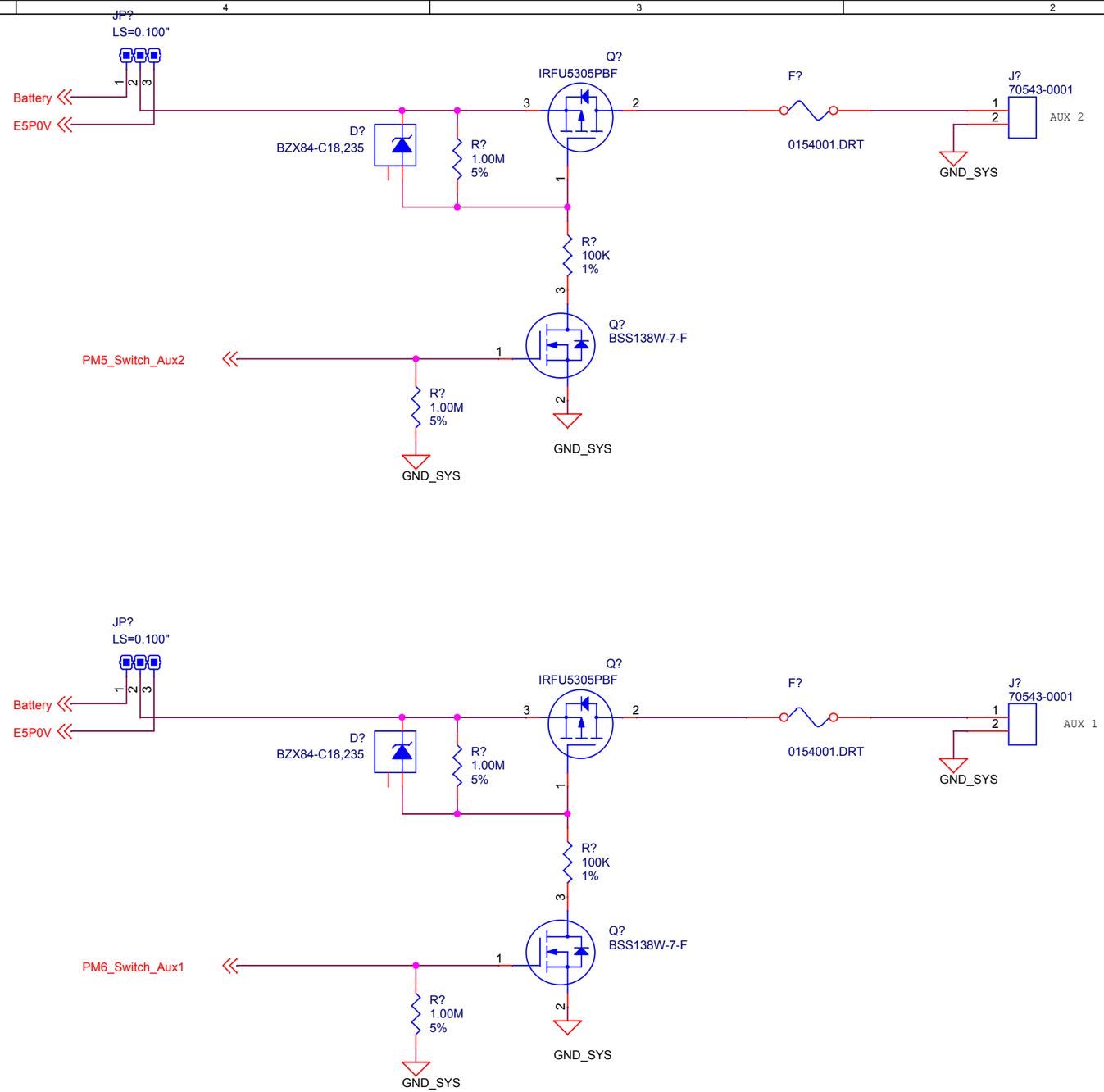

MONTEREY BAY AQUARIUM RESEARCH INSTITUTE
7700 SANDHOLDT ROAD
MOSS LANDING, CA 95039
(831) 775-1700 www.mbari.org
Copyright MBARI 2000

Title SeapHOx			Number <Doc>
Size B	Engineer SJensen	Path /	Filename seapHOx-Cap.opj
	Date: Tuesday, November 06, 2018	Sheet 1 of 1	Rev 1.0.0

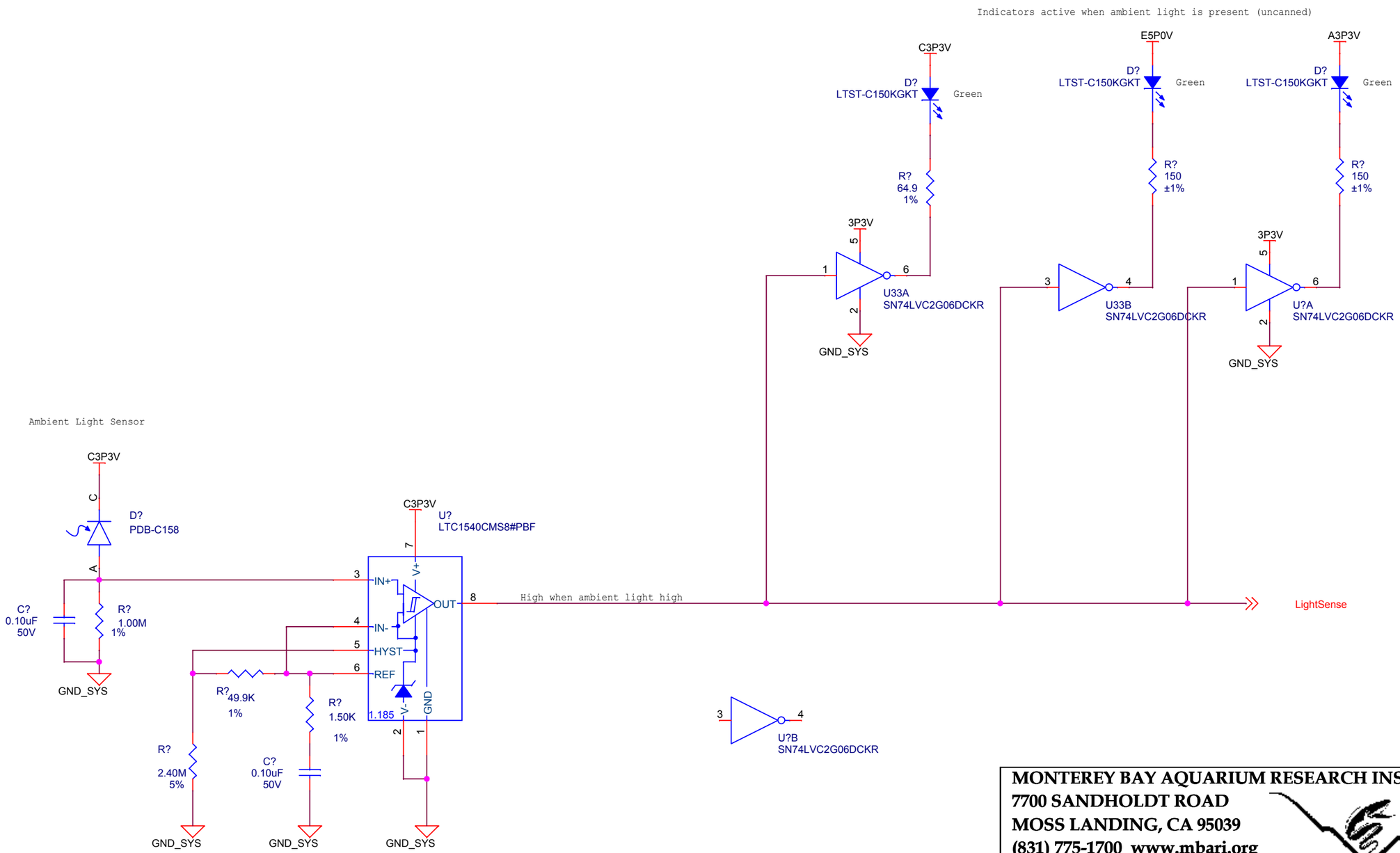

MONTEREY BAY AQUARIUM RESEARCH INSTITUTE
7700 SANDHOLDT ROAD
MOSS LANDING, CA 95039
(831) 775-1700 www.mbari.org

Copyright MBARI 2000

Title SeapHOx			Number <Doc>
Size B	Engineer SJensen	Path /	Filename seapHOx-Cap.opn
	Date: Tuesday, October 03, 2017	Sheet 1 of 1	Rev 0.0.0

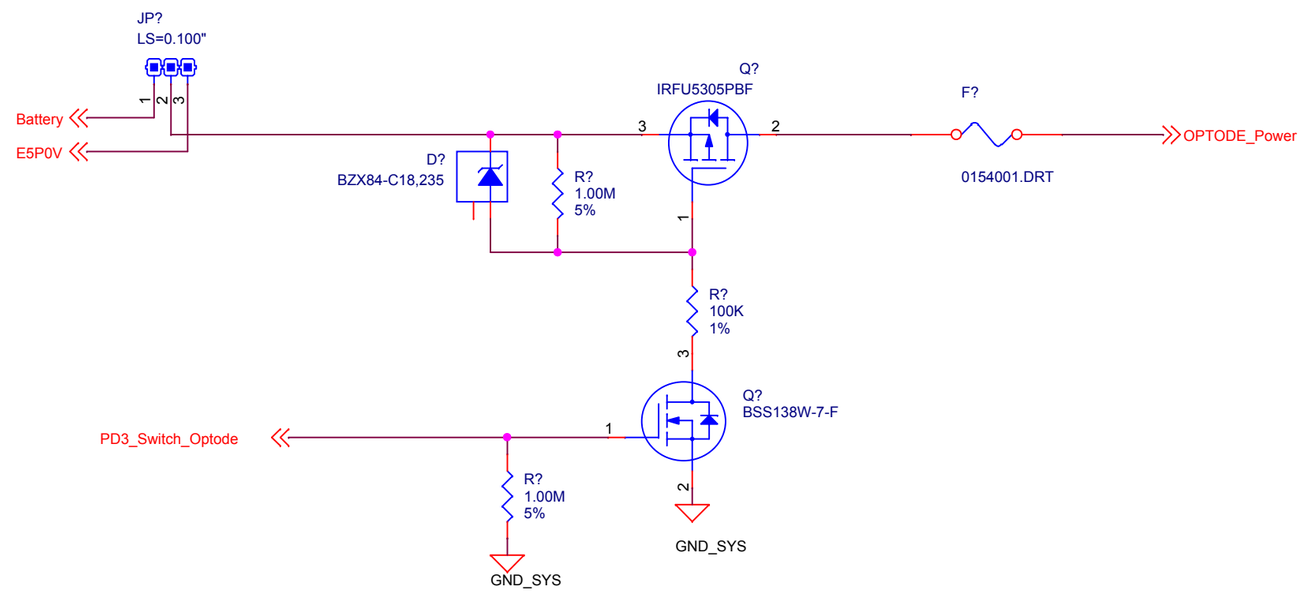

MONTEREY BAY AQUARIUM RESEARCH INSTITUTE
7700 SANDHOLDT ROAD
MOSS LANDING, CA 95039
(831) 775-1700 www.mbari.org
Copyright MBARI 2000

Title SeapHOx				Number <Doc>
Size B	Engineer SJensen	Path /	Filename seapHOx-Cap.opj	Rev 1.0.0
	Date: Tuesday, November 06, 2018		Sheet 1 of 1	

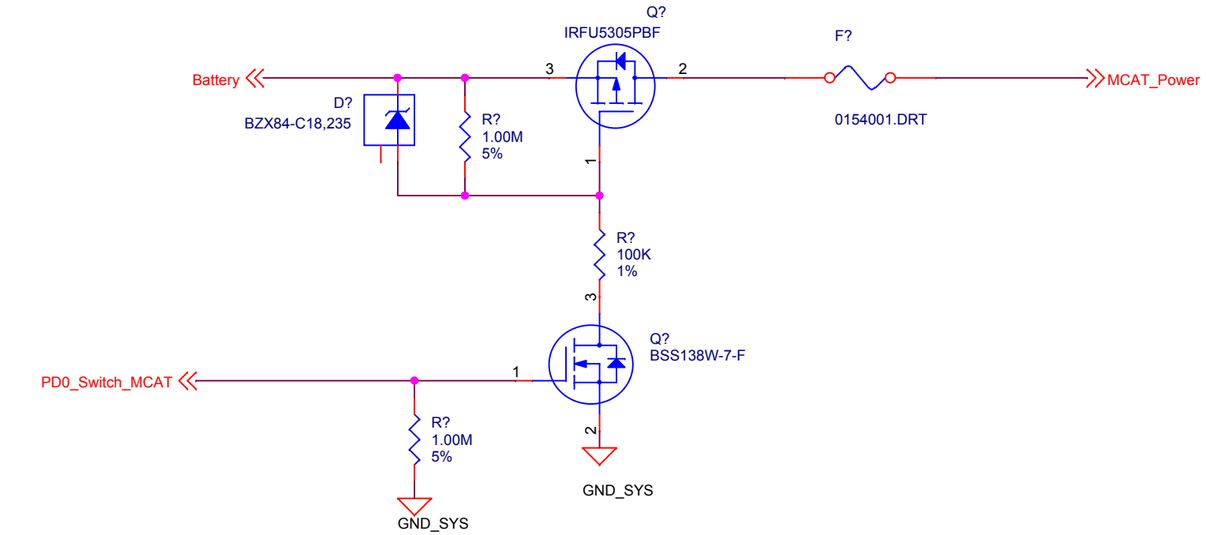

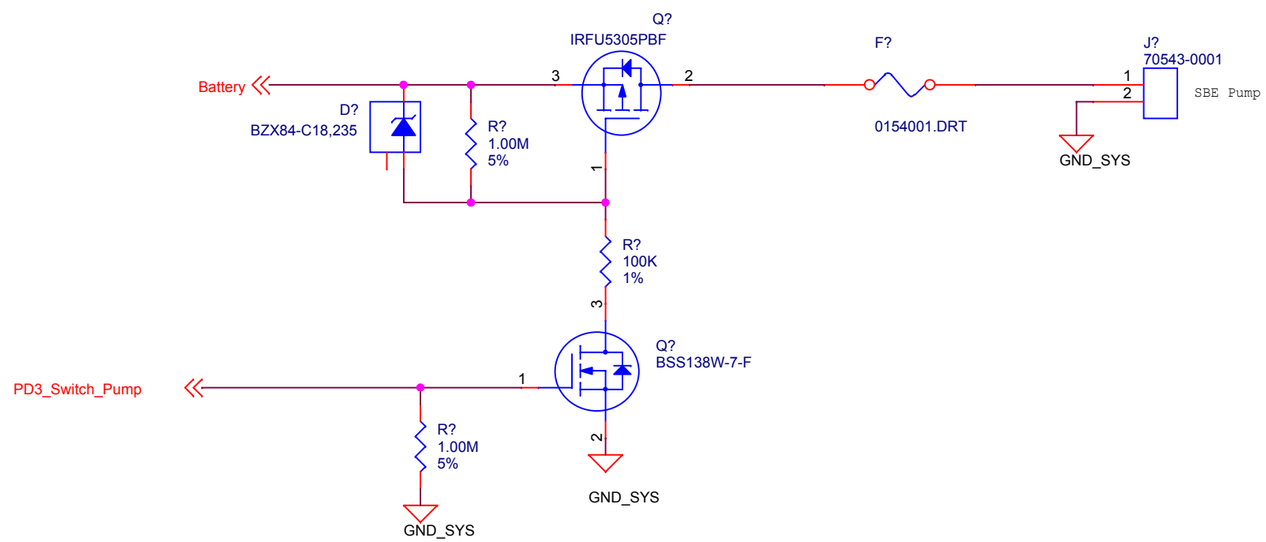

MONTEREY BAY AQUARIUM RESEARCH INSTITUTE
7700 SANDHOLDT ROAD
MOSS LANDING, CA 95039
(831) 775-1700 www.mbari.org

Copyright MBARI 2000

Title SeapHOx			Number <Doc>
Size B	Engineer SJensen	Path /	Filename seapHOx-Cap.opj
	Date: Tuesday, November 06, 2018	Sheet 1 of 1	Rev 1.0.0

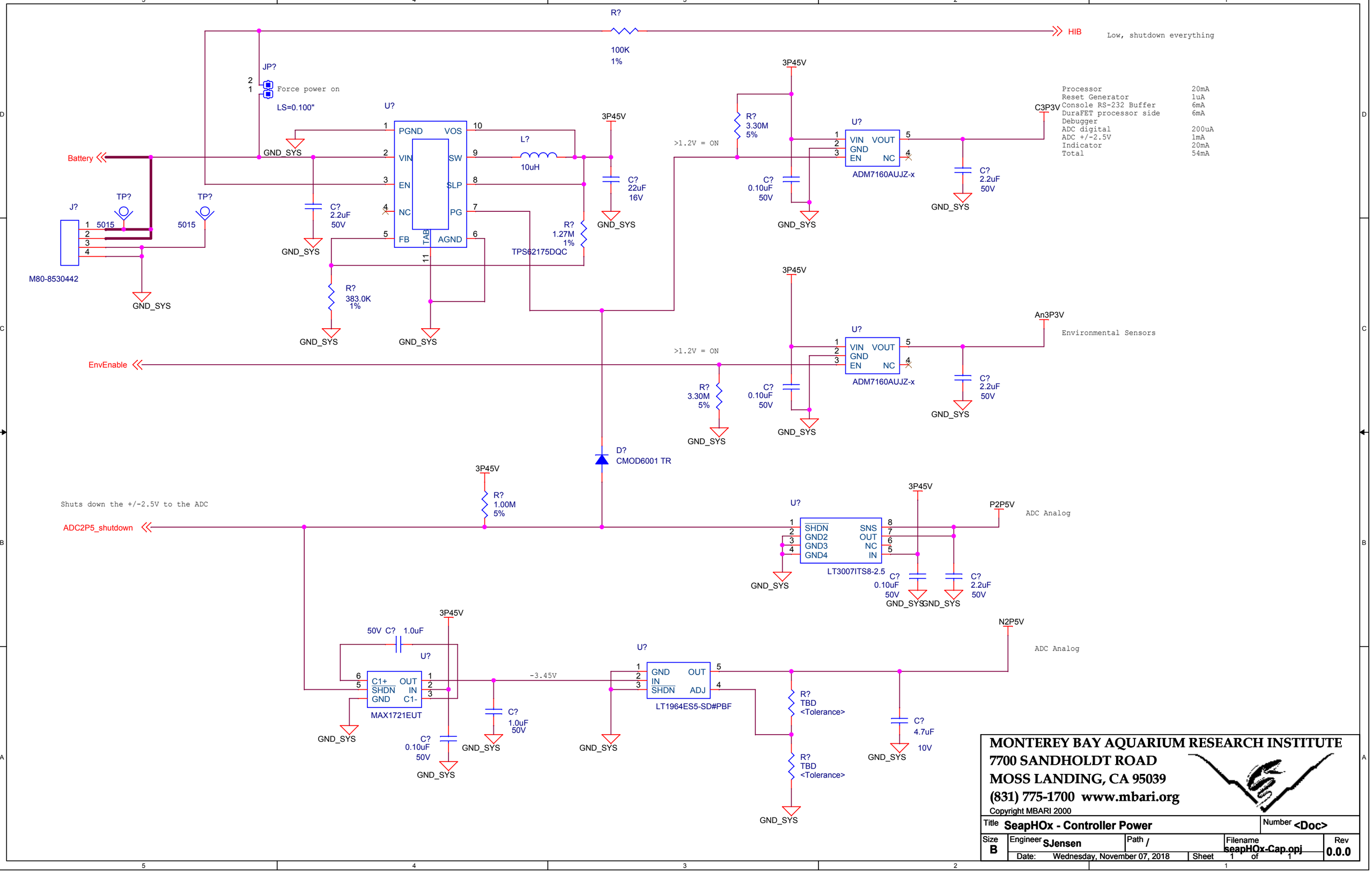

MONTEREY BAY AQUARIUM RESEARCH INSTITUTE
7700 SANDHOLDT ROAD
MOSS LANDING, CA 95039
(831) 775-1700 www.mbari.org

Copyright MBARI 2000

Title SeapHOx - Controller Power			Number <Doc>
Size B	Engineer SJensen	Path /	Filename seapHOx-Cap.opj
	Date: Wednesday, November 07, 2018	Sheet 1 of 1	Rev 0.0.0

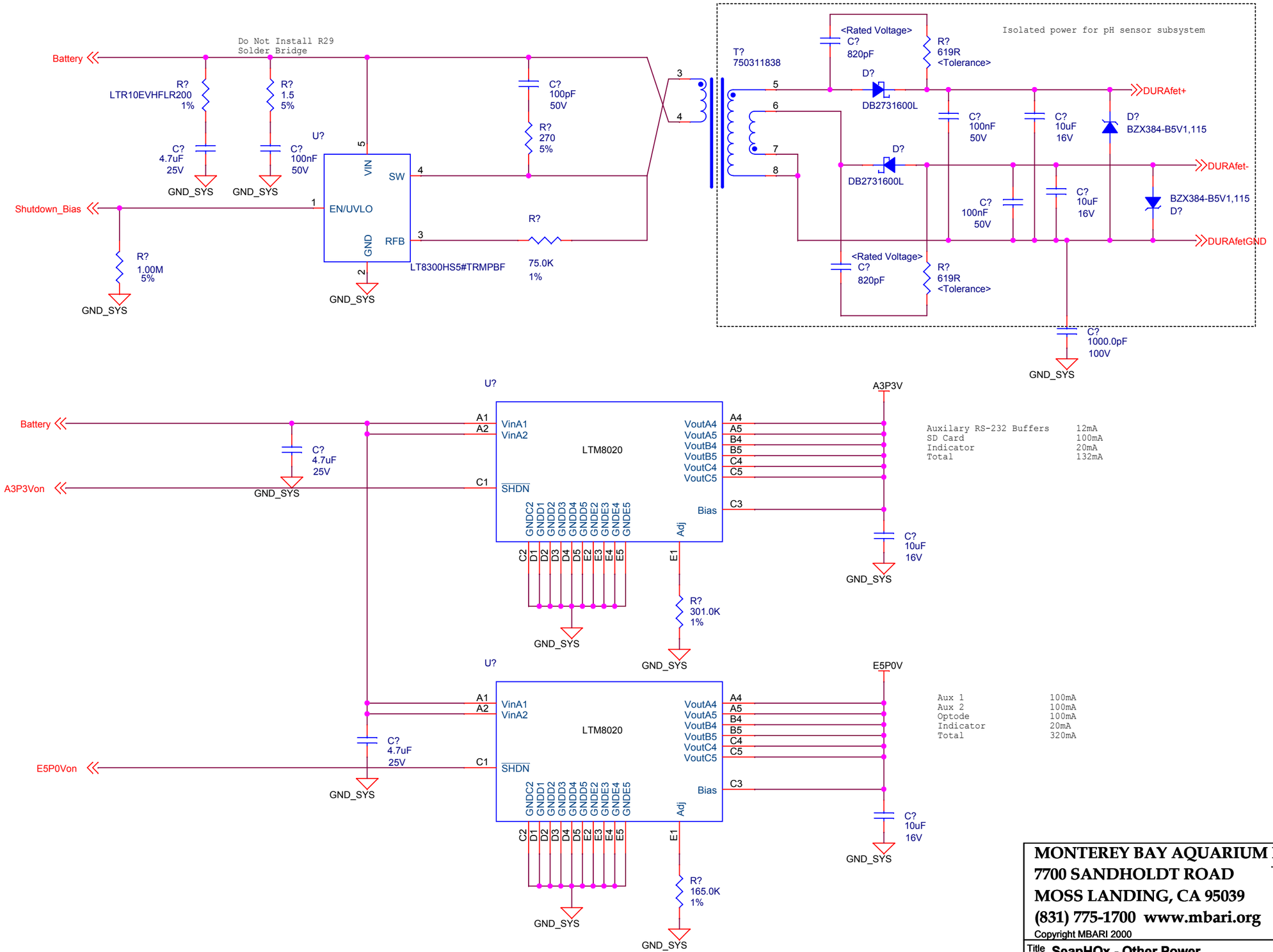

MONTEREY BAY AQUARIUM RESEARCH INSTITUTE
7700 SANDHOLDT ROAD
MOSS LANDING, CA 95039
(831) 775-1700 www.mbari.org

Copyright MBARI 2000

Title SeapHOx - Other Power			Number <Doc>
Size B	Engineer SJensen	Path /	Filename seapHOx-Cap.opj
	Date: Wednesday, November 07, 2018	Sheet 1 of 1	Rev 0.0.0