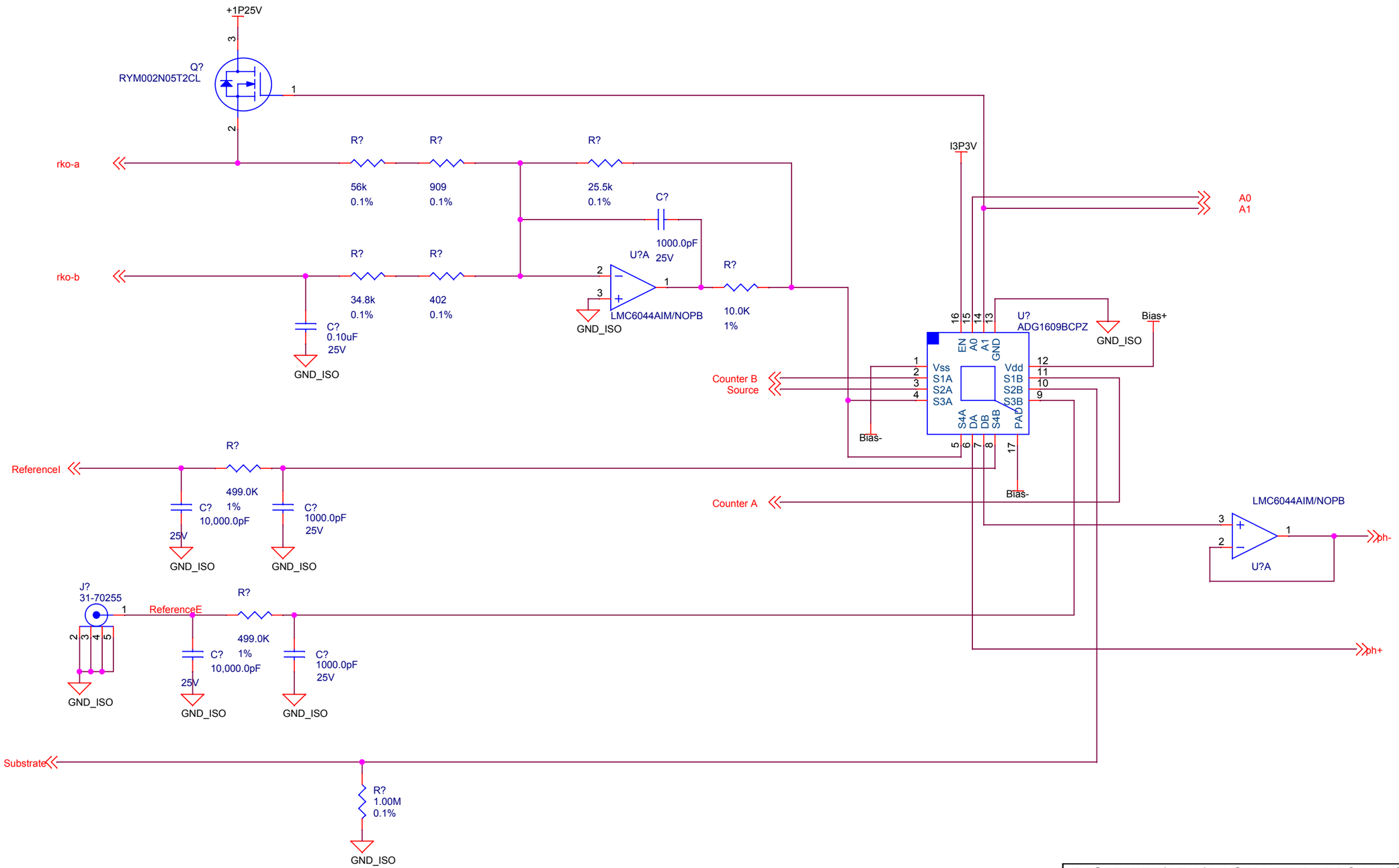

MONTEREY BAY AQUARIUM RESEARCH INSTITUTE
7700 SANDHOLDT ROAD
MOSS LANDING, CA 95039
(831) 775-1700 www.mbari.org

Copyright MBARI 2000

Title SeapHOx			Number <Doc>
Size B	Engineer SJensen	Path /	Filename seapHOx-Cap.opt
	Date: Wednesday, November 01, 2017	Sheet 1 of 1	Rev 0.0.0

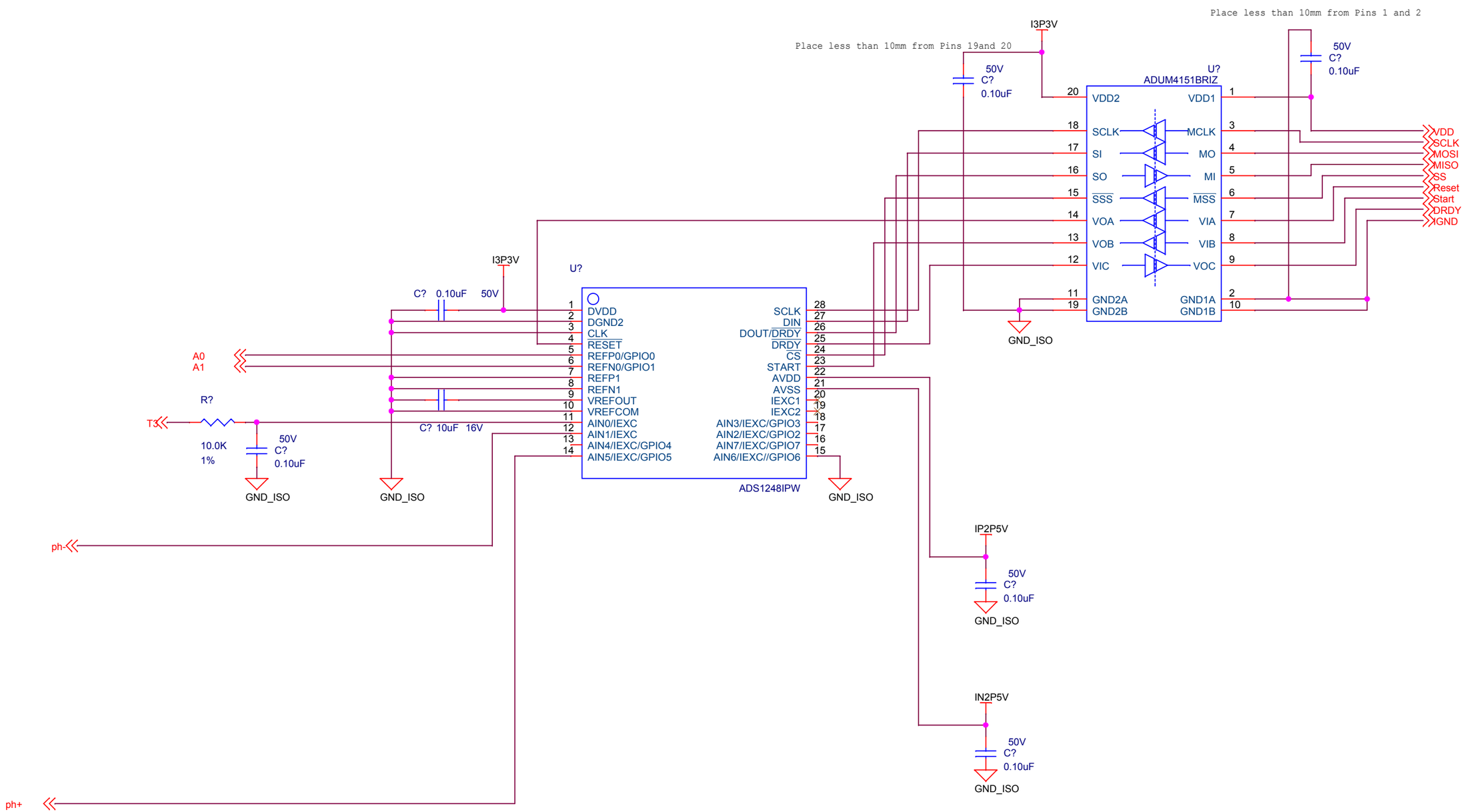

MONTEREY BAY AQUARIUM RESEARCH INSTITUTE
7700 SANDHOLDT ROAD
MOSS LANDING, CA 95039
(831) 775-1700 www.mbari.org

Copyright MBARI 2000

Title SeapHOx			Number <Doc>
Size B	Engineer SJensen	Path /	Filename seapHOx-Cap.opt
	Date: Tuesday, November 14, 2017	Sheet 1 of 1	Rev 0.0.0

pH Sensor Interface

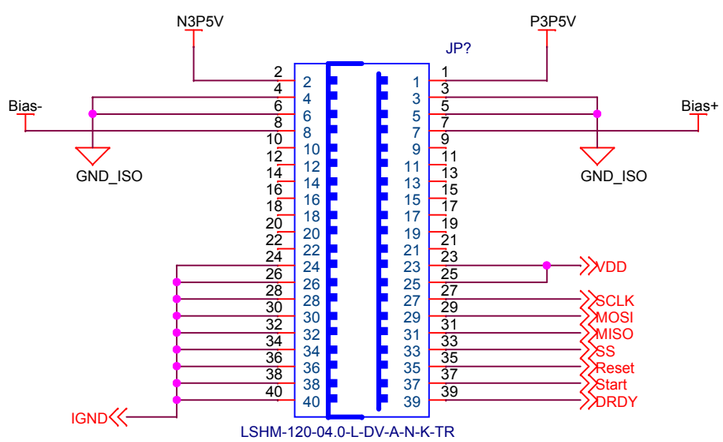

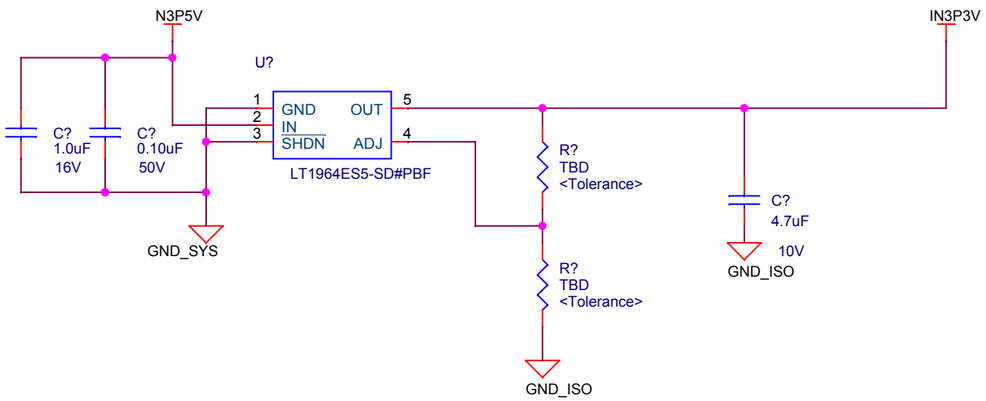

DuraFET isolated Bias power

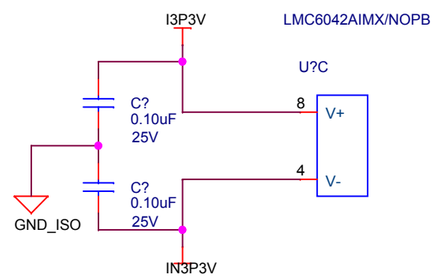

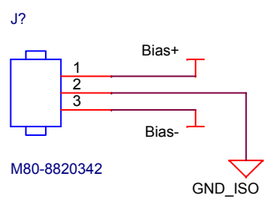

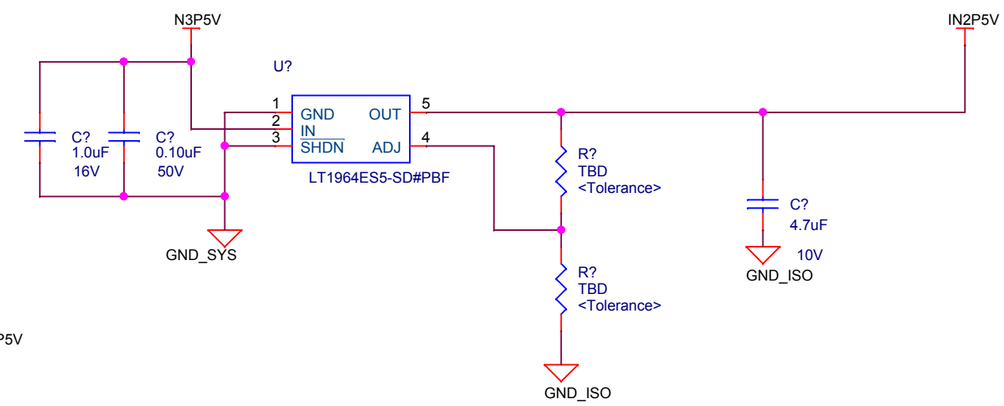

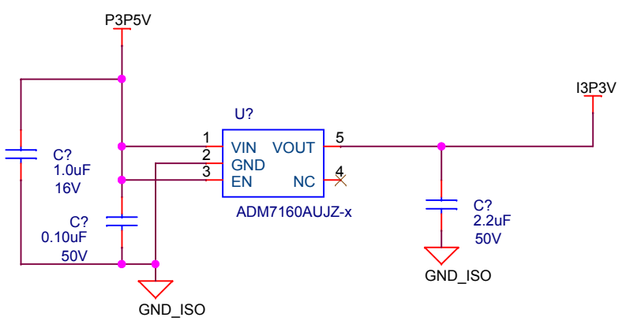

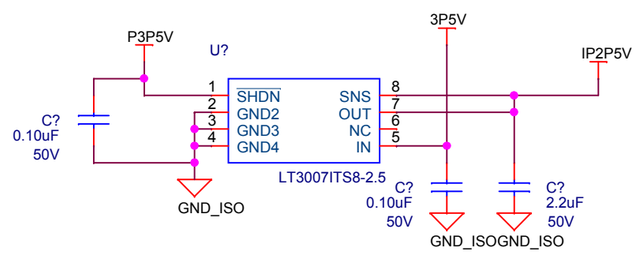

MONTEREY BAY AQUARIUM RESEARCH INSTITUTE
7700 SANDHOLDT ROAD
MOSS LANDING, CA 95039
(831) 775-1700 www.mbari.org

Copyright MBARI 2000

Title SeapHOx			Number <Doc>
Size B	Engineer SJensen	Path /	Filename seapHOx-Cap.opn
	Date: Tuesday, November 14, 2017	Sheet 1 of 1	Rev 0.0.0

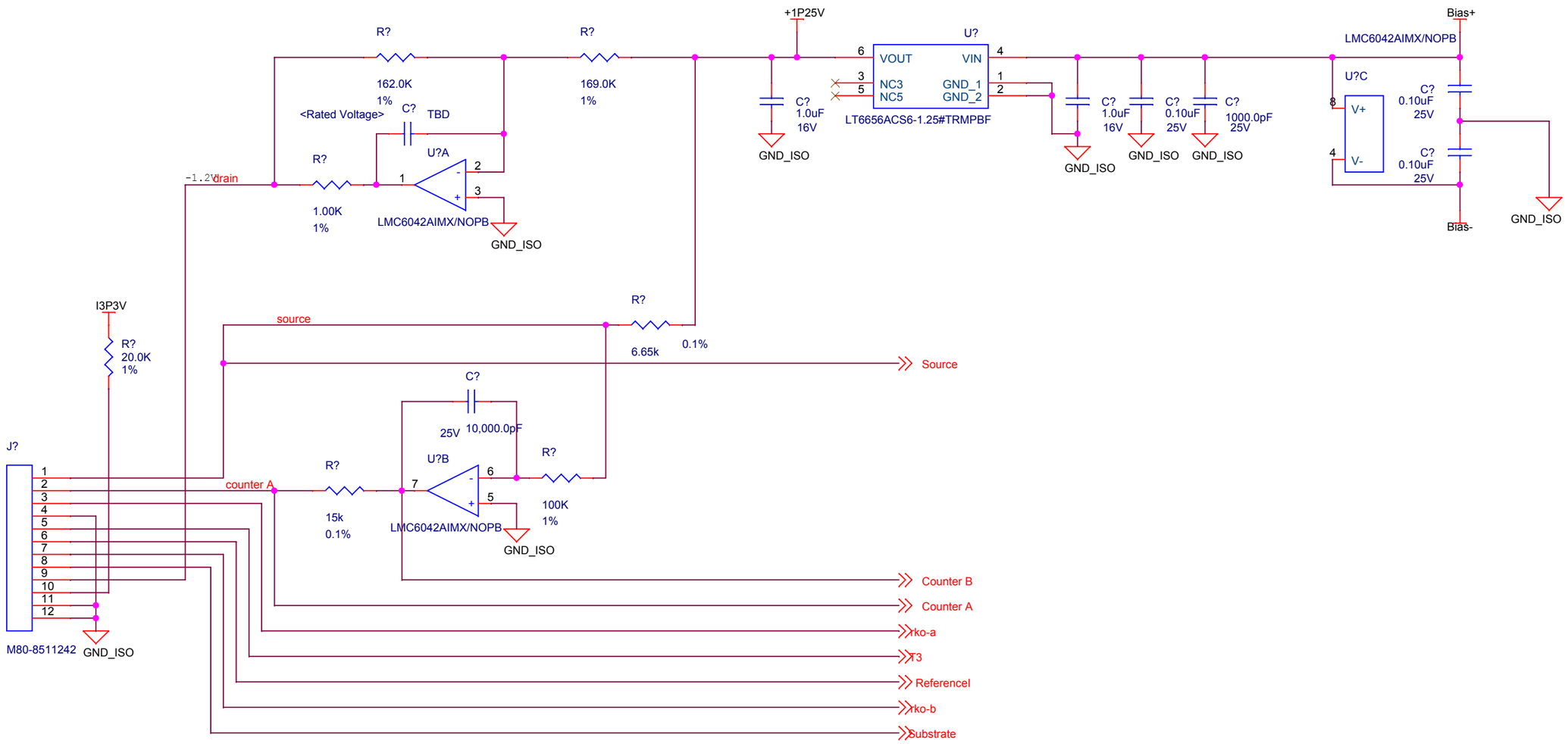

MONTEREY BAY AQUARIUM RESEARCH INSTITUTE
7700 SANDHOLDT ROAD
MOSS LANDING, CA 95039
(831) 775-1700 www.mbari.org

Copyright MBARI 2000

Title SeapHOx			Number <Doc>
Size B	Engineer SJensen	Path /	Filename seapHOx-Cap.opt
	Date: Tuesday, November 14, 2017	Sheet 1 of 1	Rev 0.0.0