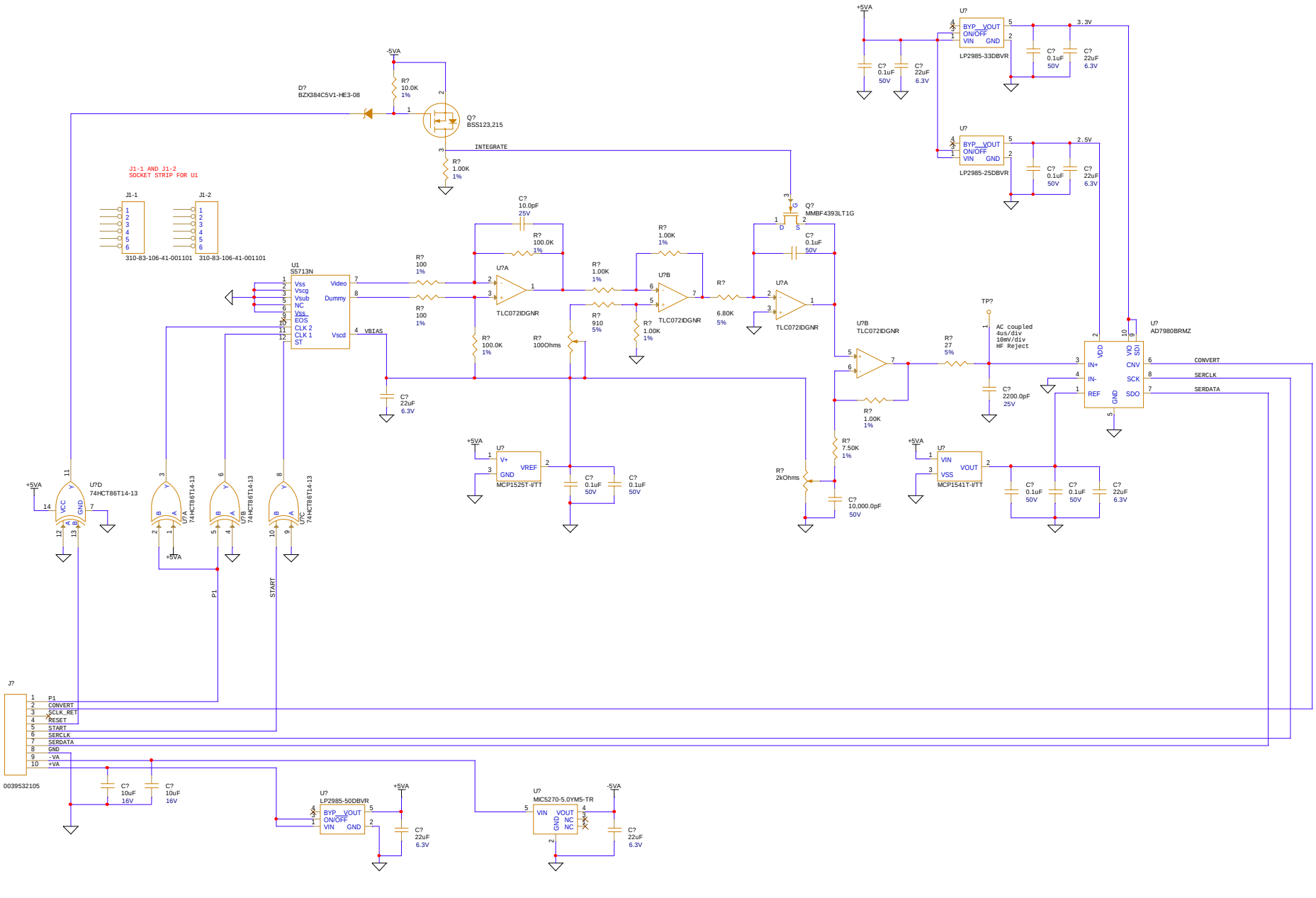
J1-1 AND J1-2
SOCKET STRIP FOR U1
J1-1
J1-2
310-83-106-41-001101
310-83-106-41-001101
U1
S5713N
Vss
Vscg
Vsub
NC
Vss
EOS
CLK 2
CLK 1
ST
Video
Dummy
Vscd
VBIAS
D?
BZX384C5V1-HE3-08
Q?
BSS123,215
INTEGRATE
Q?
MMBF4393LT1G
U7A
TLC072IDGNR
U7B
TLC072IDGNR
U7C
TLC072IDGNR
U7D
74HCT86T14-13
U7A
74HCT86T14-13
U7B
74HCT86T14-13
U7C
74HCT86T14-13
U?
MCP1525T-I/TT
U?
MCP1541T-I/TT
U?
LP2985-33DBVR
U?
LP2985-25DBVR
U?
AD7980BRMZ
TP?
AC coupled
4us/div
10mV/div
HF Reject
CONVERT
SERCLK
SERDATA
P1
START
J?
0039532105
U?
LP2985-50DBVR
U?
MIC5270-5.0YM5-TR
+VE1
+VE2
-VE1
-VE2
U?C
TLC072IDGNR
Monterey Bay Aquarium
Research Institute
7700 Sandholdt Road, Moss Landing, CA 95039
Schematic Name:
MBARI ISUS V2 Spectrometer
Page Title:
Zeiss MMS Analog Board
Engineer:
Luke Coletti
Project Name:
<Project Name>
Group Name:
<Group>
Designer:
<Designer>
System:
<System>
Subsystem:
<Subsystem>
Last Updated By:
<Updated By>
Drawing Number:
<MBARI DN>
Release:
<RevVersion>
<Version>
Status:
<Status>
Size:
C
Page Modify Date:
Thursday, May 04, 2023
Check In Date:
<LCID>
Sheet 0 of 1