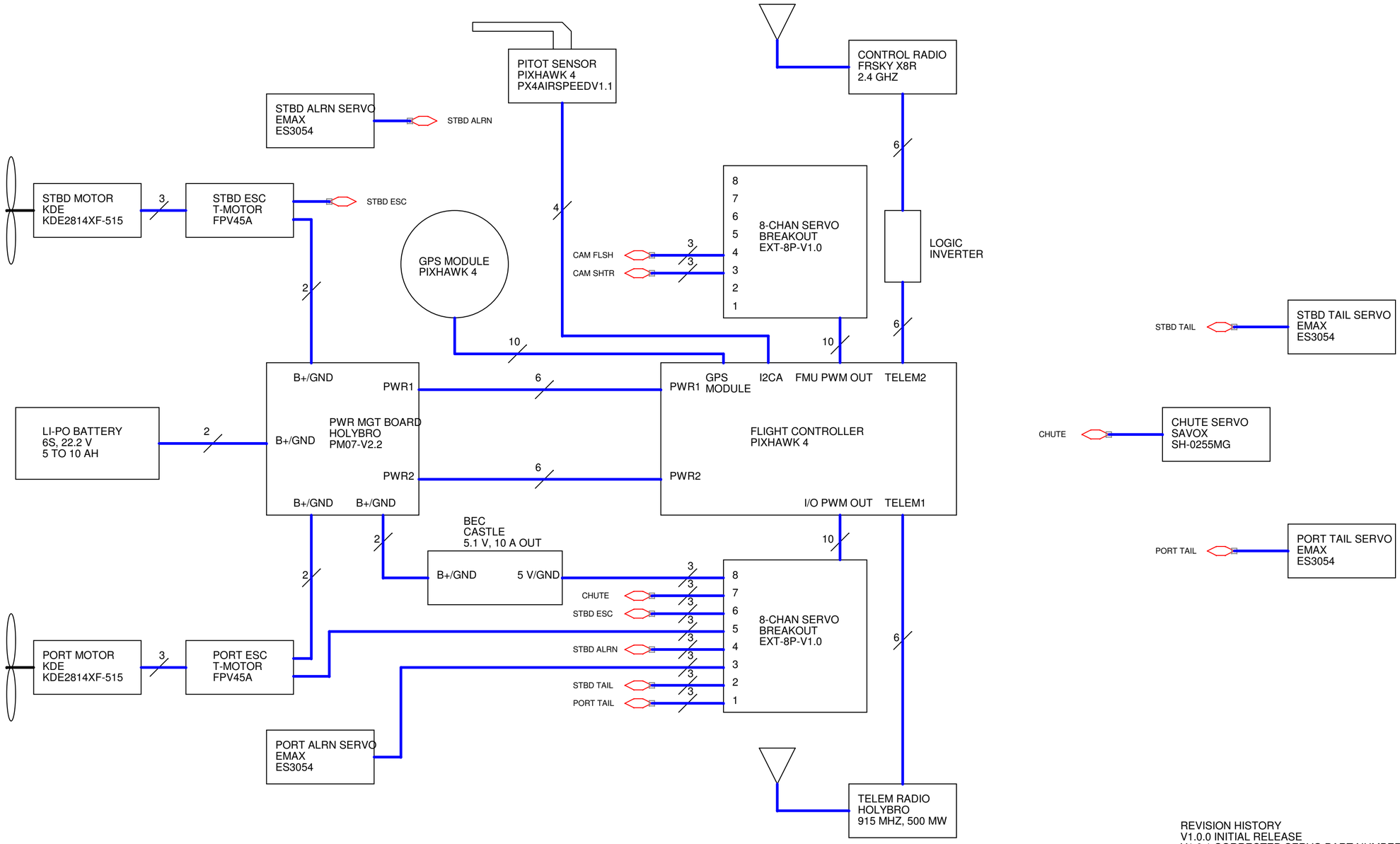

REVISION HISTORY
V1.0.0 INITIAL RELEASE
V1.0.1 CORRECTED SERVO PART NUMBERS, ADDED PITOT SENSOR PART NUMBER

MBARI	Monterey Bay Aquarium Research Institute 7700 Sandhold Road, Moss Landing, CA 95039		
	Title MBARI Believer: System Interconnects		
Engineer Paul McGill	Size C	Document Number <Doc>	Layout File	Rev 1.0.1
Layout	Date: Monday, April 11, 2022	Sheet 1 of 1		