MSLED
Internal Electrical Connections

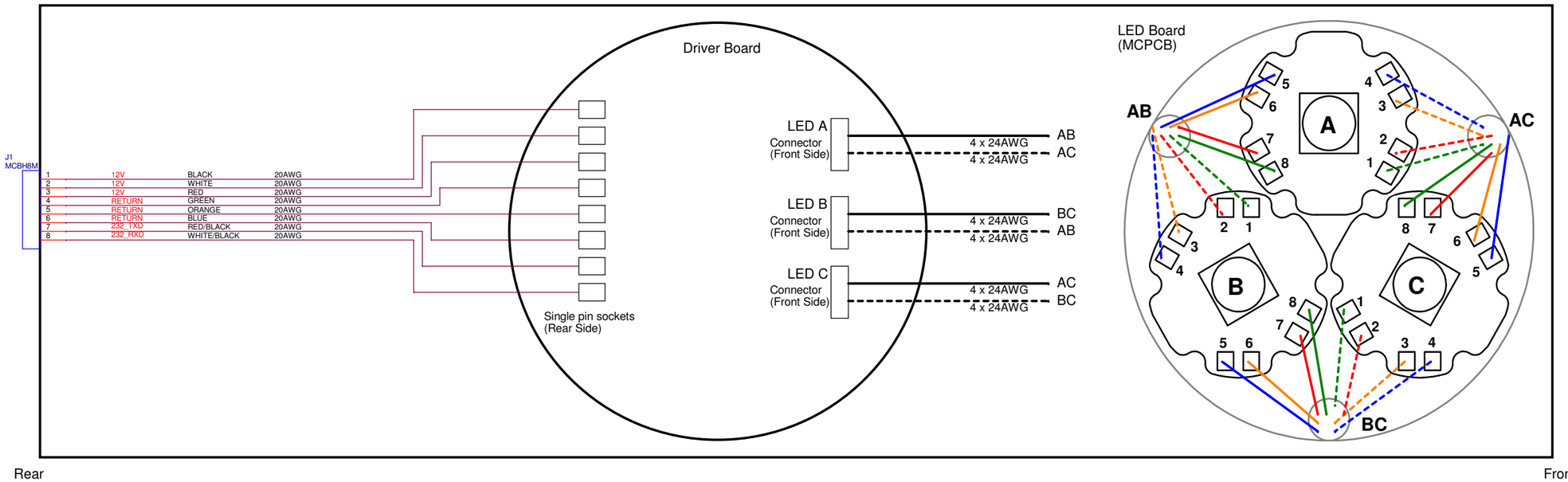

M B A R I	Monterey Bay Aquarium Research Institute 7700 Sandholdt Road, Moss Landing, CA 95039		
	Title MSLED Internal Electrical Connections		
Engineer Kecy	Size C	Document Number <Doc>	Layout File <Layout File>	Rev <Rev>
Layout <Layout>	Date: Tuesday, December 17, 2019		Sheet 1 of 1	