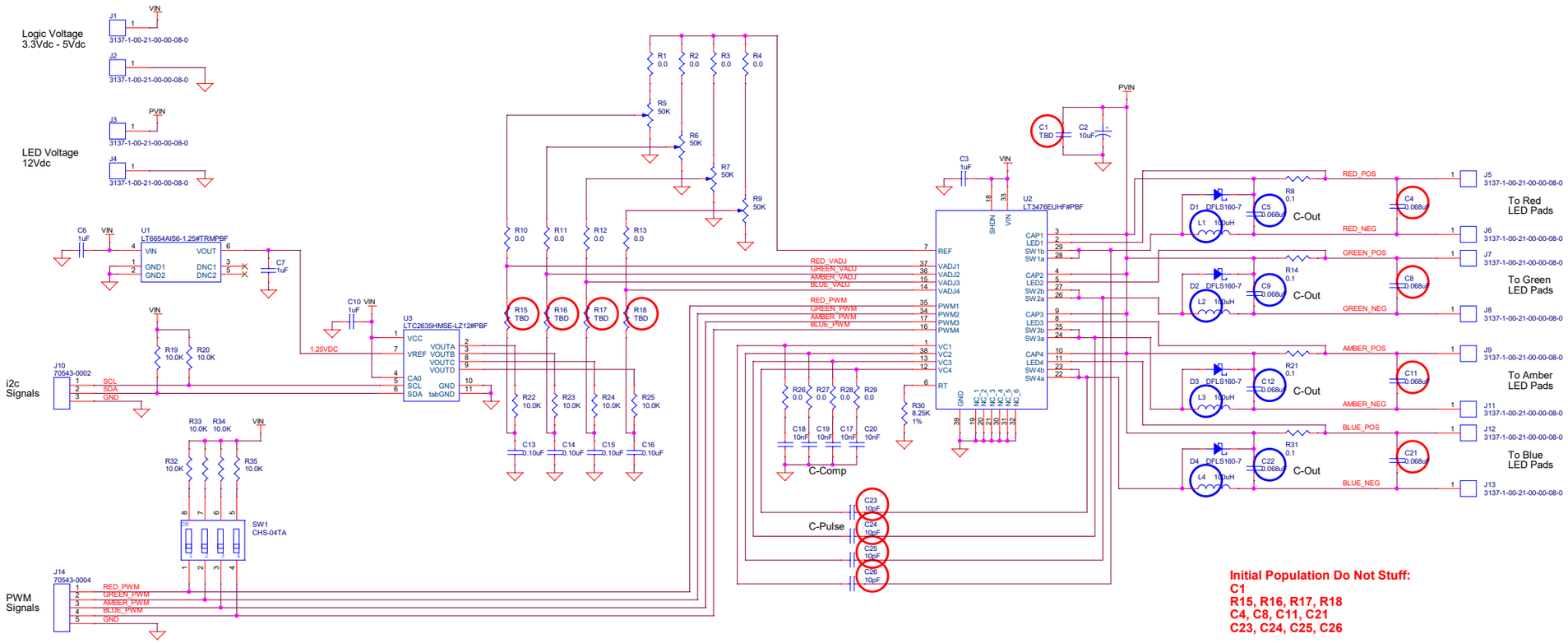

Initial Population Do Not Stuff:
C1
R15, R16, R17, R18
C4, C8, C11, C21
C23, C24, C25, C26

Initial Population Values:

L1, L2, L3, L4: 10uH
C5, C9, C12, C22: 0.1uF

Dimming Options:

	Poten	DAC
R10	0	Open
R11	0	Open
R12	0	Open
R13	0	Open
R15	Open	0
R16	Open	0
R17	Open	0
R18	Open	0

Components that may be changed during testing:
R10, R11, R12, R13
R15, R16, R17, R18
R26, R27, R28, R29
C17, C18, C19, C20
C23, C24, C25, C26
L1, L2, L3, L4
C4, C5, C8, C9, C11, C12. C21, C22

C4/C5, C8/C9, C11/C12, C21/C22 (Output Caps)
will be either 1913 or 2416 sized.
Pads will accommodate both.
Series: ECW-U
Values: 56nF, 68nF, 82nF, 100nF, 120nF, 150nF

L1, L2, L3, and L4 will be:
Series: ASPIAIG-S6055
Values: 3.3uH, 4.7uH, 6.8uH, 8.2uH,10uH, 15uH, 22uH, 33uH, 47uH. 68uH, 100uH

Drawing # 100221311

MONTEREY BAY AQUARIUM RESEARCH INSTITUTE
7700 SANDHOLDT ROAD
MOSS LANDING, CA 95039
(831) 775-1700 www.mbari.org
Copyright MBARI 2000

Title	LT3476 Test Board		Number	
Size C	Engineer Chad Kecy	Layout <Layout Eng.>	Filename <Filename>	Rev A
	Date: Tuesday, February 05, 2019	Sheet 1 of 2		