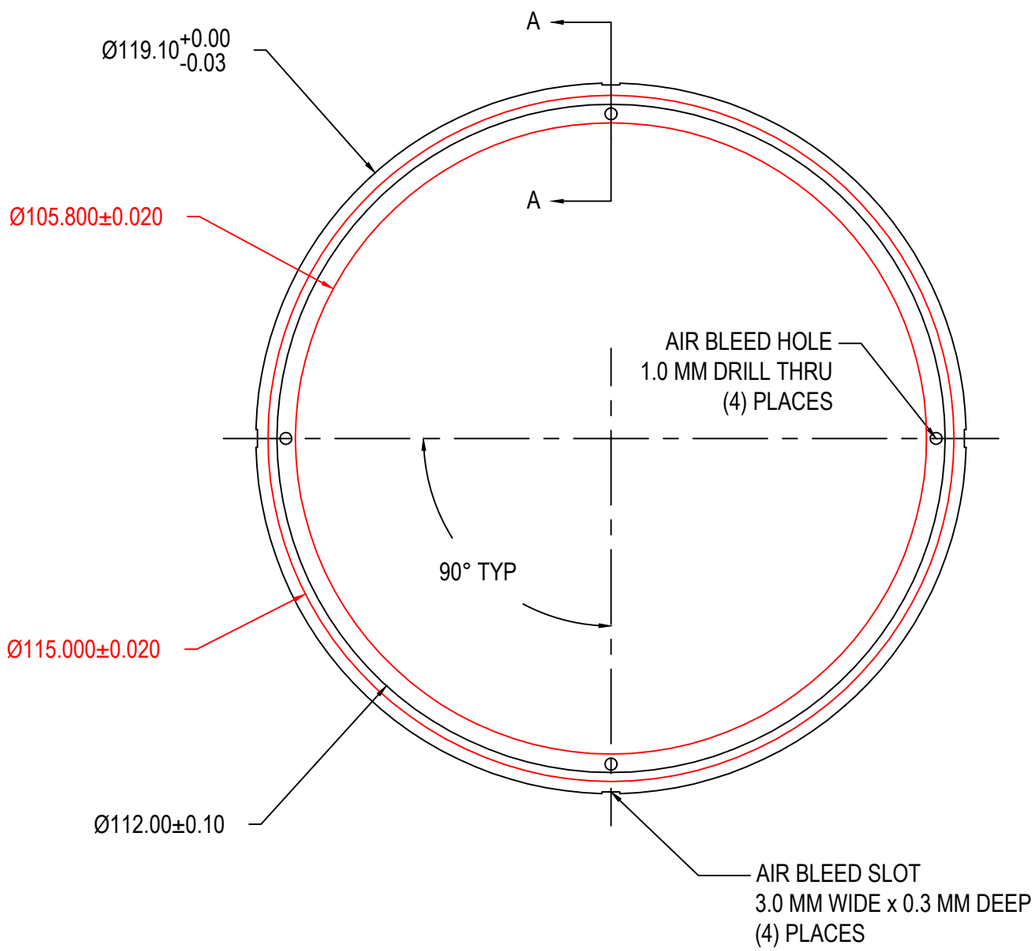

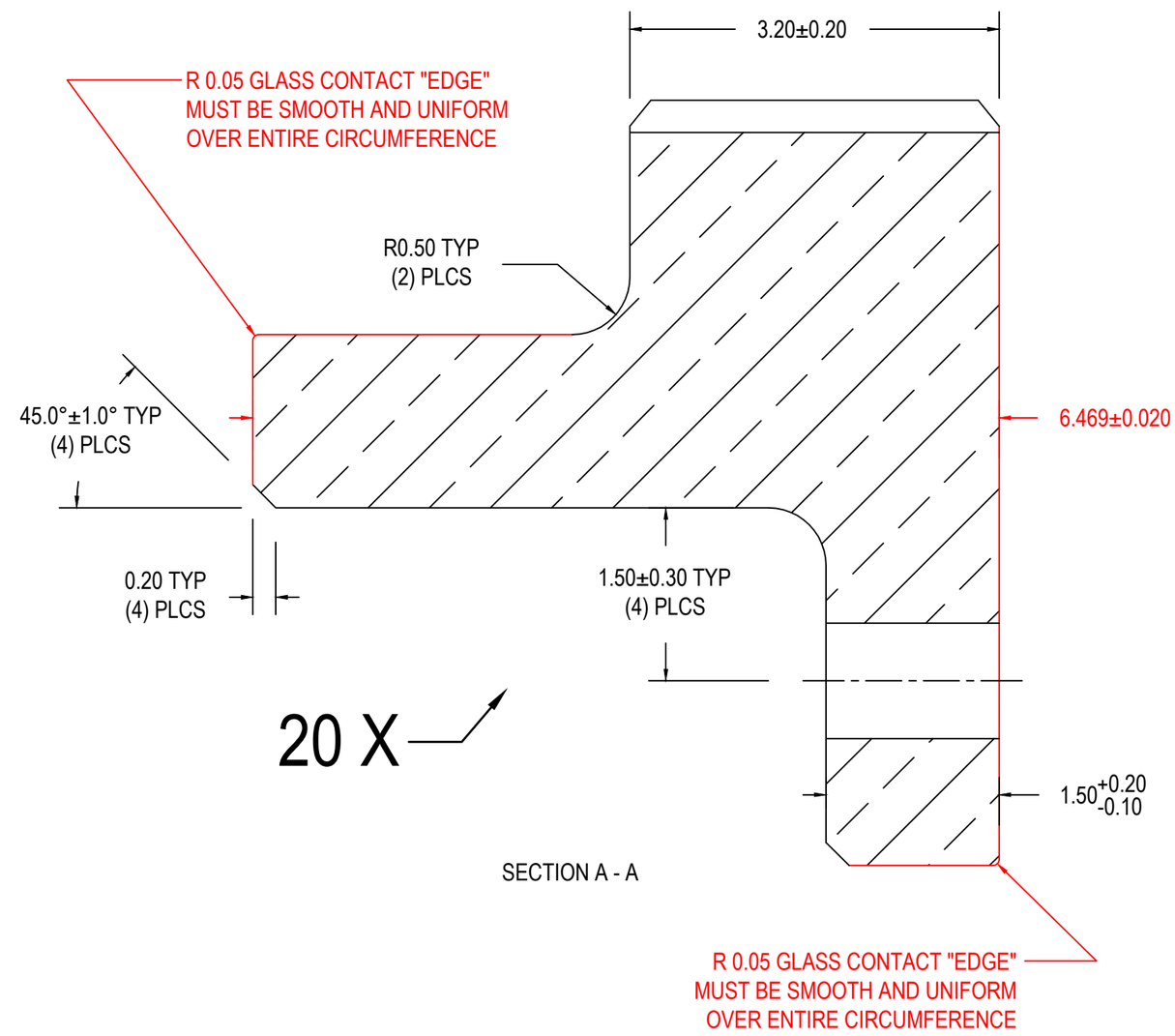

ALL DIMENSIONS IN MILLIMETERS

MATERIAL: 7075 T6 ALUMINUM
BLACK ANODIZE TYPE II

TITLE			
SPACER A			
DATE: AUGUST 27, 2020	SCALE: 1 X	DRAWN BY: P. REMIJAN	APPROVED BY:
PROPERTY OF: FATHOM IMAGING			
PROJECT: DEEP SEA 4K	DESIGN FILE: 89L FINAL - Rev 3	REVISIONS:	DWG NUMBER: 89L - C - 21