Agenda: 4K ROV Camera Architecture Brainstorming

July 2, 2019

Invited Attendees?

- Dave French
- Andy Hamilton
- Paul McGill
- Brent Roman
- Mike Risi
- Rich Henthorn

Goals of the Session

- Background on lens controllers
  - Performance requirements.
  - Architectural constraints.
- Brainstorm on lens controller architectures
  - Four different architectural possibilities.
    - #1 - Build from scratch.
    - #2 - Use Fujinon controller for Iris.
    - #3 - Use analog inputs to Fujinon Controller.
    - #4 - Use digital inputs to Fujinon Controller.
  - What option is the easiest to implement?
  - How much software development required?

Requirements

- Camera controls
  - Zoom : RATE control with smooth start and stop into low speed movement , but fast ramp to high speed. Feedback is either tachometer or encoder, depending on drive motor selection.
  - Focus : POSITION control with smooth ramps to commanded position. Feedback is either position pot or encoder depending on drive motor selection.
  - Iris: POSITION control with smooth ramps to commanded position. Feedback is either position pot or encoder depending on drive motor selection. Command signal comes though camera/lens interface.
    - Option: Use Fujinon lens drive for Iris.
  - Black and white balance, shutter speed , etc. Handled through camera system remote control panel (RCP).

Issues to resolve in system design

- Can Ethernet be real-time enough for control response without lag or intermittent sluggishness?
  - Option would be to switch to EIA232/422, but would then have to write communications application?
- Which embedded processor/development environment would be the best choice for the motor drive application?
- Fujinon remote digital interface does not appear to have a rate control mode for zoom – position only. Would this be any good?
- Not clear of Fujinon analog zoom input is rate or position – looks like position. Better option to spoof the hand control rocker input? It is definitely a rate control.

MBARI requirements for our main ROV cameras

- MBARI requires professional quality zoom and focus controls!

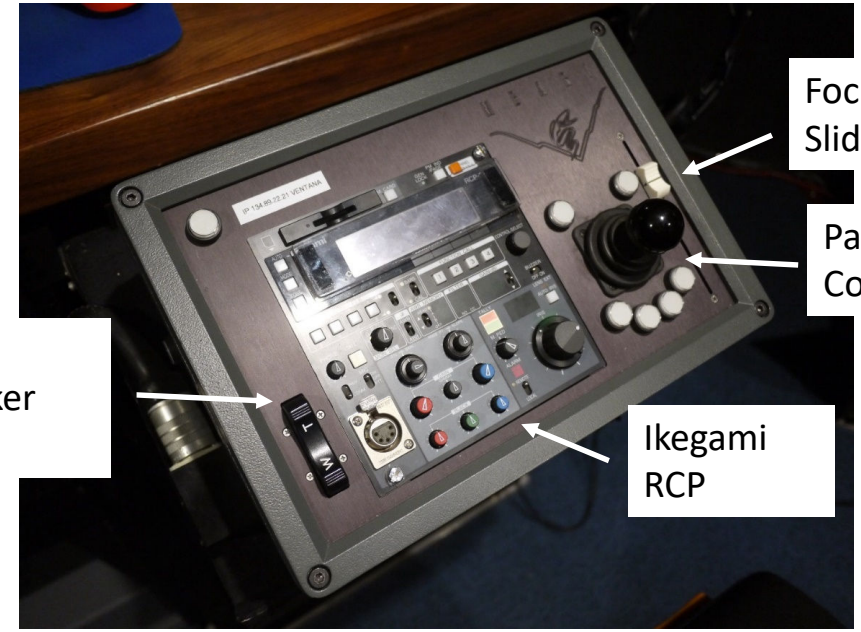

Commercial follow focus example

https://vimeo.com/43330022

Focus example

https://www.youtube.com/watch?v=X8oWnbcLI40

(2,794,882 views)

Top to Bottom Architecture 1

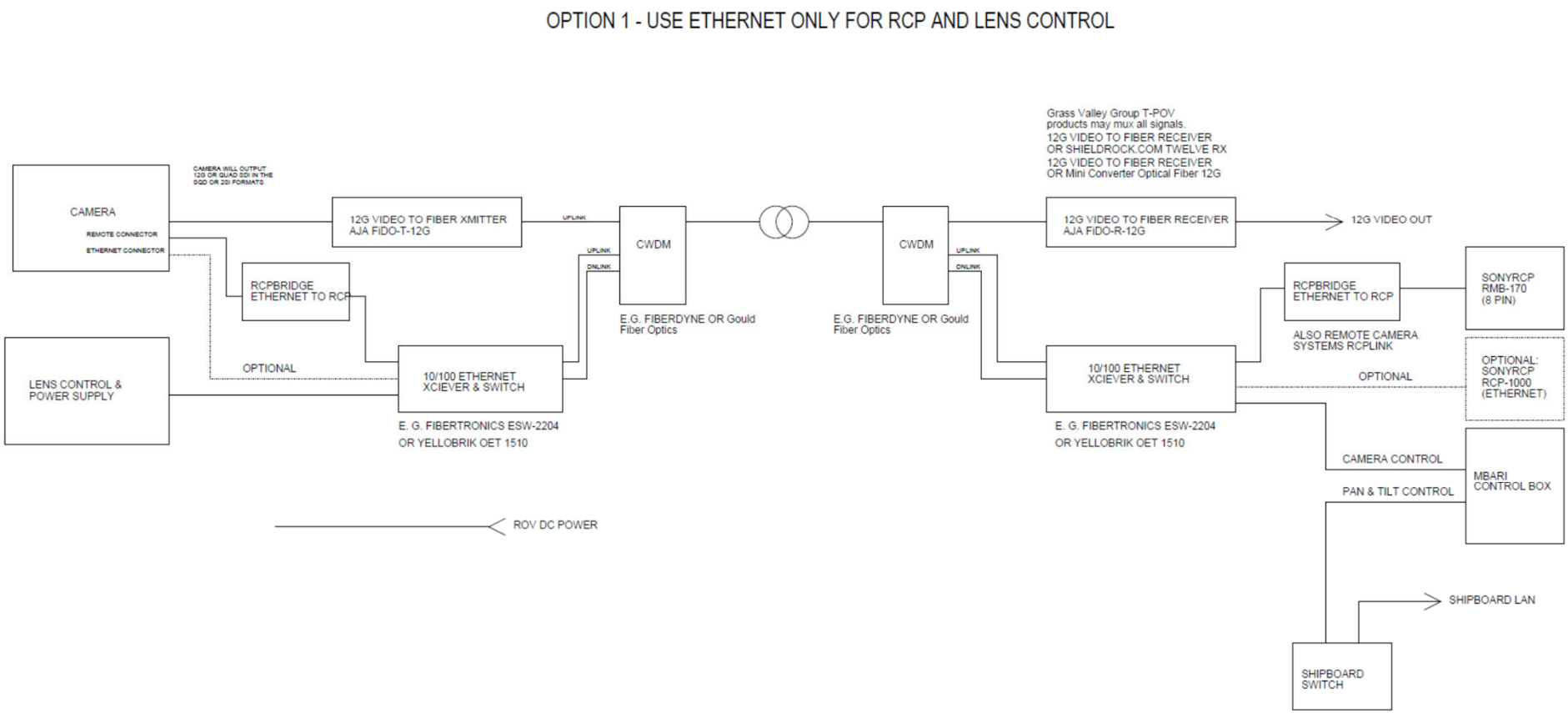

Top to Bottom Architecture 2

OPTION 2 - USE T-POV ONLY FOR RCP AND LENS CONTROL

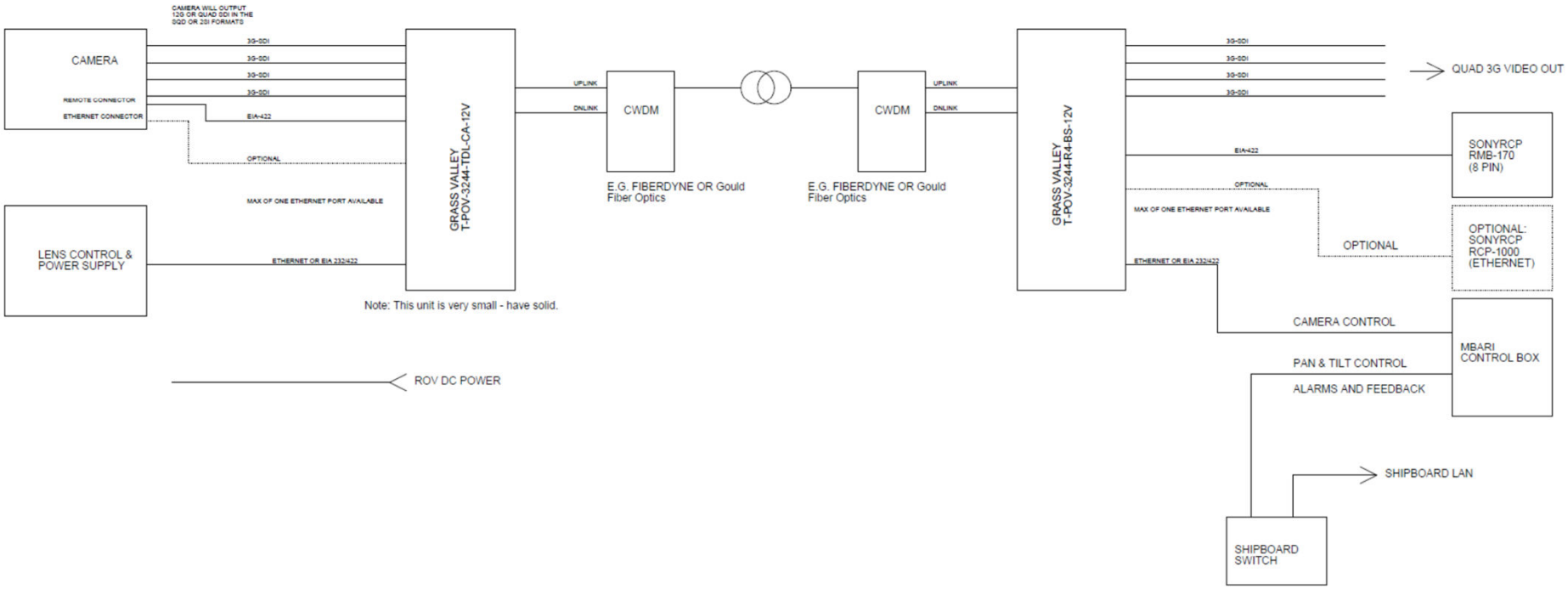

OPTION 1 - USE CUSTOM MOTORS, FEEDBACK & DRIVER (COULD BE COTS FOLLOW FOCUS MOTORS)

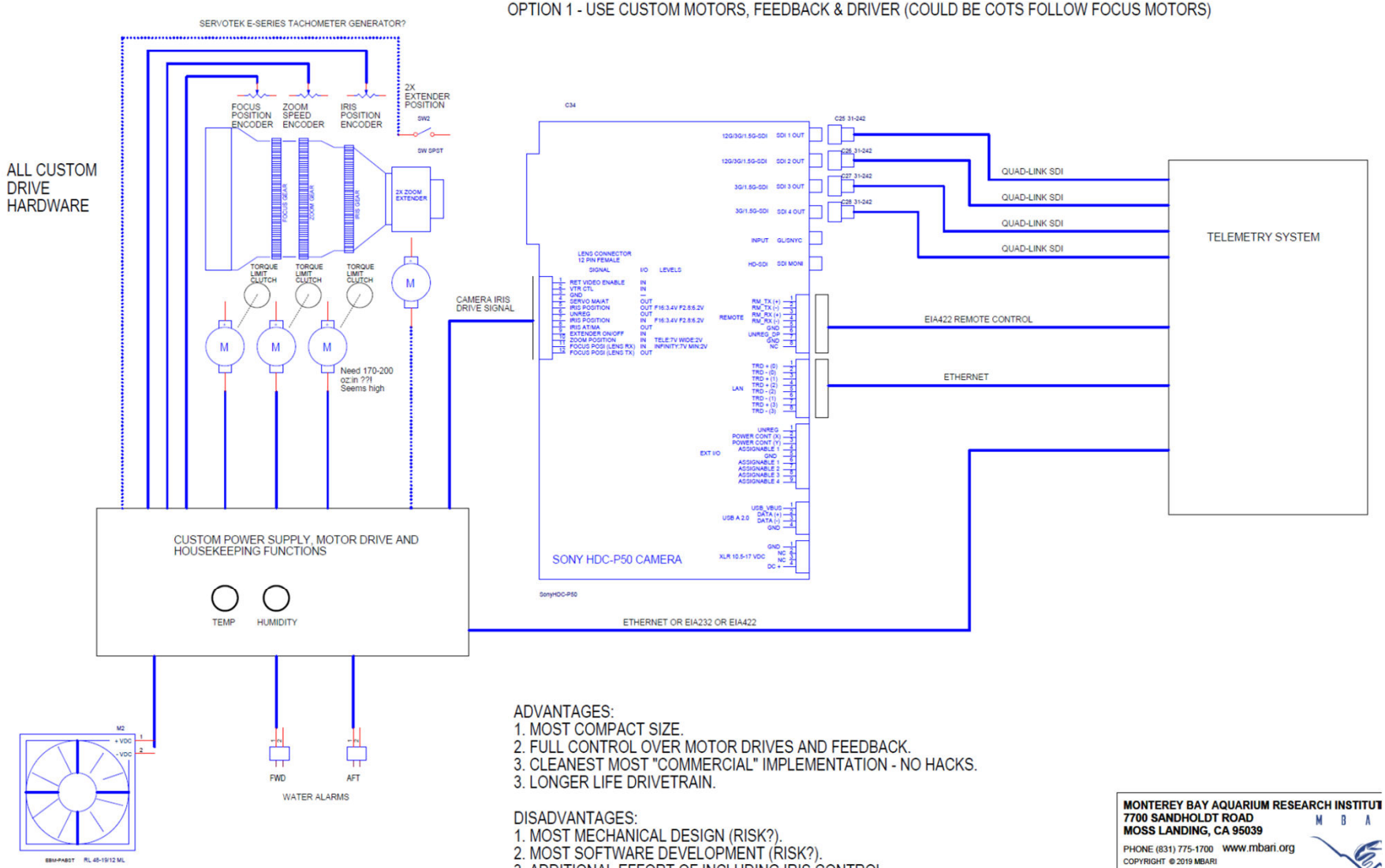

ADVANTAGES:
1. MOST COMPACT SIZE.
2. FULL CONTROL OVER MOTOR DRIVES AND FEEDBACK.
3. CLEANEST MOST "COMMERCIAL" IMPLEMENTATION - NO HACKS.
3. LONGER LIFE DRIVETRAIN.

DISADVANTAGES:
1. MOST MECHANICAL DESIGN (RISK?).
2. MOST SOFTWARE DEVELOPMENT (RISK?).
3. ADDITIONAL EFFORT OF INCLUDING IRIS CONTROL.

MONTEREY BAY AQUARIUM RESEARCH INSTITUT
7700 SANDHOLDT ROAD
MOSS LANDING, CA 95039
PHONE (831) 775-1700 www.mbari.org

COPYRIGHT © 2019 MBARI
MAY NOT BE COPIED WITHOUT PERMISSION

OPTION 2 - USE FUJINON LENS MOTORS & FEEDBACK WITH CUSTOM DRIVER

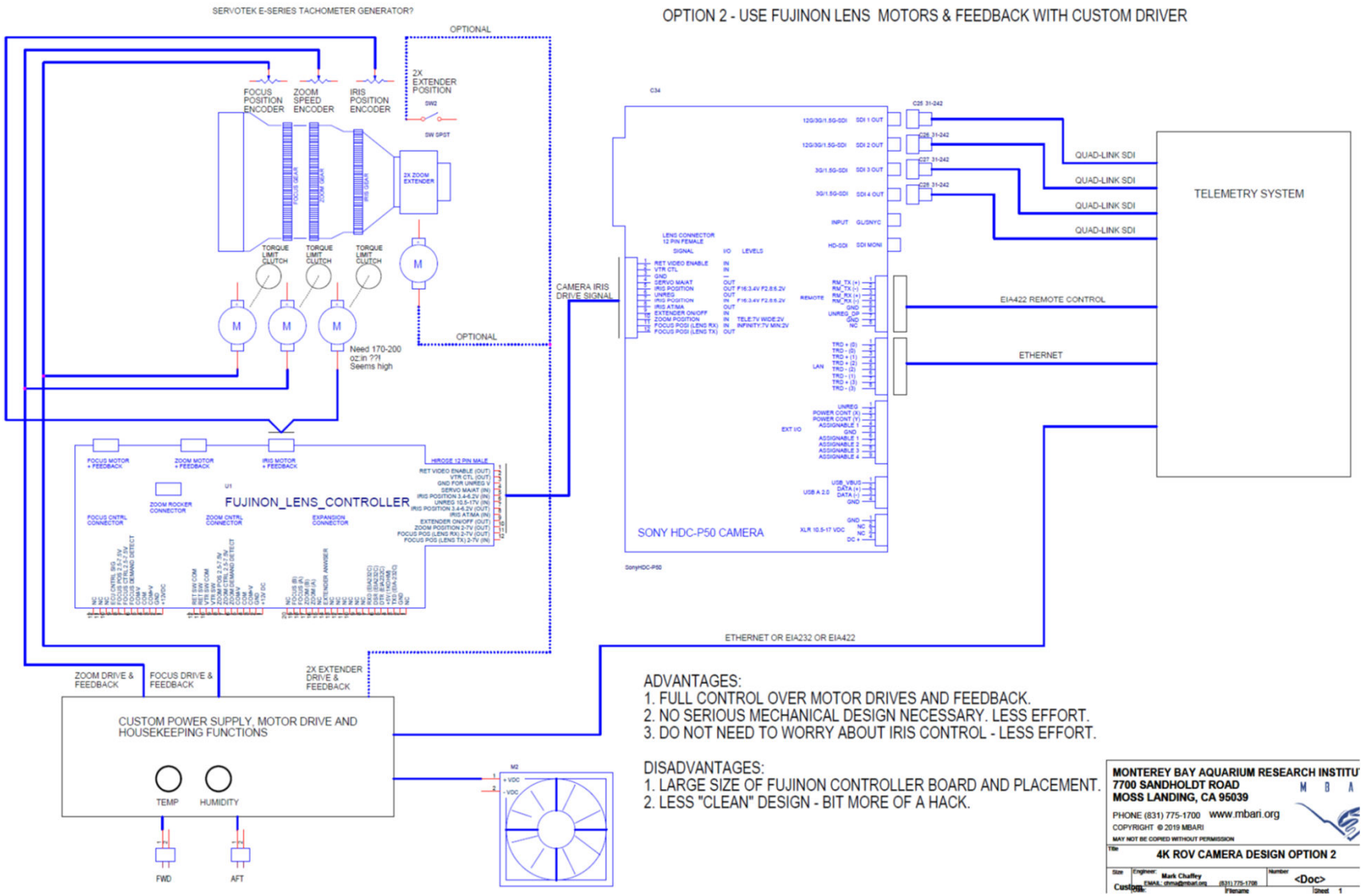

ADVANTAGES:
1. FULL CONTROL OVER MOTOR DRIVES AND FEEDBACK.
2. NO SERIOUS MECHANICAL DESIGN NECESSARY. LESS EFFORT.
3. DO NOT NEED TO WORRY ABOUT IRIS CONTROL - LESS EFFORT.

DISADVANTAGES:
1. LARGE SIZE OF FUJINON CONTROLLER BOARD AND PLACEMENT.
2. LESS "CLEAN" DESIGN - BIT MORE OF A HACK.

MONTEREY BAY AQUARIUM RESEARCH INSTITU
7700 SANDHOLDT ROAD
MOSS LANDING, CA 95039
PHONE (831) 775-1700 www.mbari.org

COPYRIGHT © 2019 MBARI
MAY NOT BE COPIED WITHOUT PERMISSION

Title: 4K ROV CAMERA DESIGN OPTION 2

Size: Custom | Engineer: Mark Chaffey, EMAIL: chma@mbari.org, (831) 775-1798 | Number: <Doc> | Date: | Filename | Sheet 1

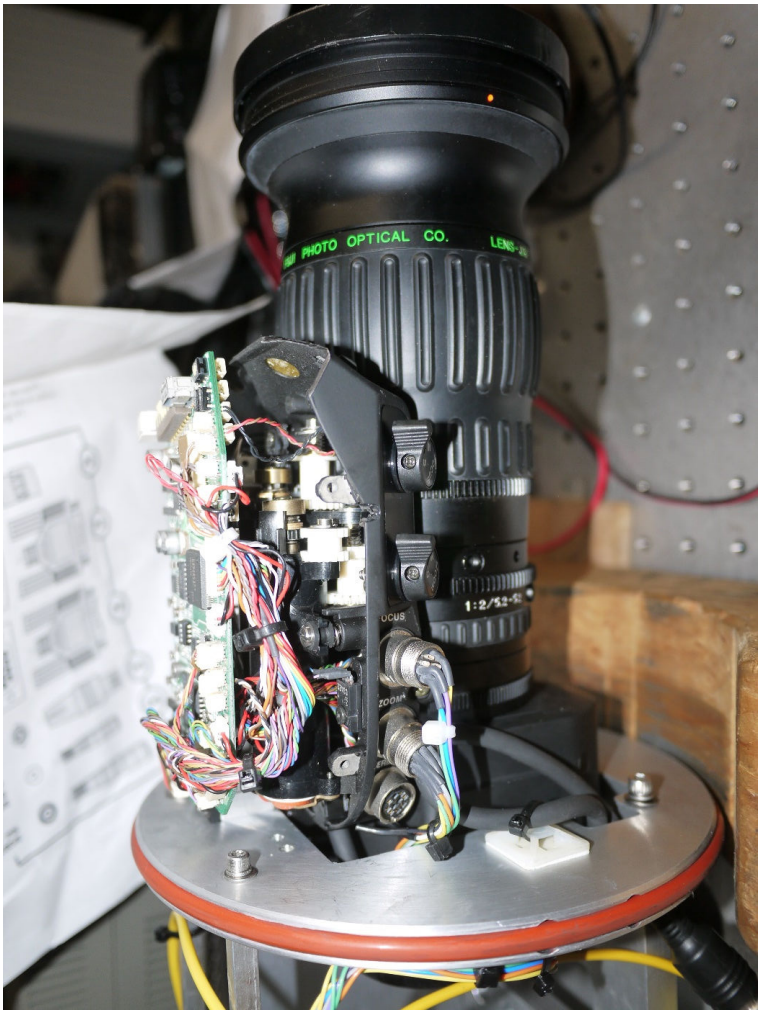
PHOTO OPTICAL CO.
FOCUS
ZOOM

OPTION 3 - USE FUJINON MOTORS, FEEDBACK & DRIVER WITH ANALOG CONTROL INPUT

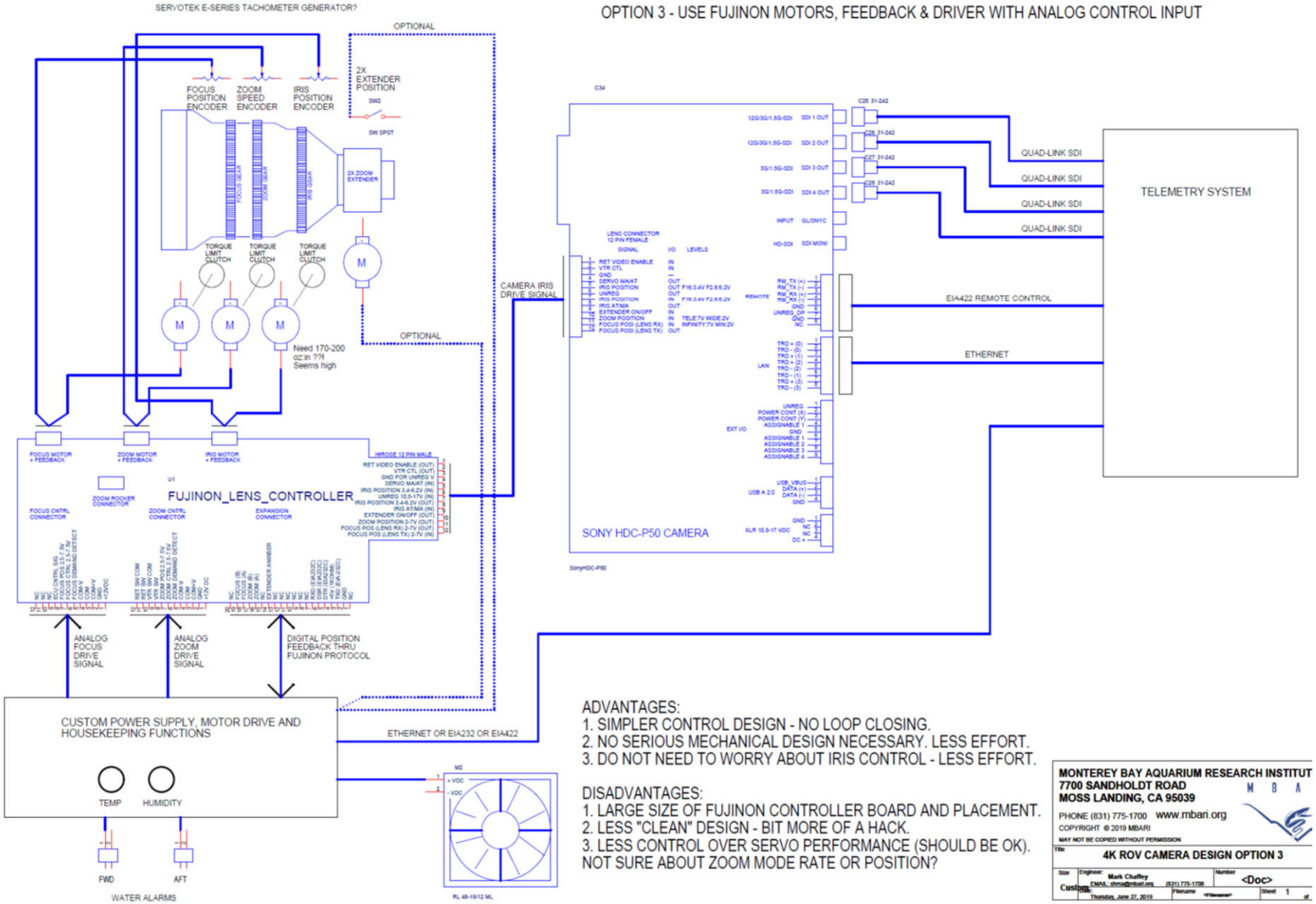

ADVANTAGES:
1. SIMPLER CONTROL DESIGN - NO LOOP CLOSING.
2. NO SERIOUS MECHANICAL DESIGN NECESSARY. LESS EFFORT.
3. DO NOT NEED TO WORRY ABOUT IRIS CONTROL - LESS EFFORT.

DISADVANTAGES:
1. LARGE SIZE OF FUJINON CONTROLLER BOARD AND PLACEMENT.
2. LESS "CLEAN" DESIGN - BIT MORE OF A HACK.
3. LESS CONTROL OVER SERVO PERFORMANCE (SHOULD BE OK). NOT SURE ABOUT ZOOM MODE RATE OR POSITION?

MONTEREY BAY AQUARIUM RESEARCH INSTITUT
7700 SANDHOLDT ROAD
MOSS LANDING, CA 95039
PHONE (831) 775-1700 www.mbari.org

COPYRIGHT © 2019 MBARI
MAY NOT BE COPIED WITHOUT PERMISSION

Title: 4K ROV CAMERA DESIGN OPTION 3

Size	Engineer	Number
Custom	Mark Chaffey, EMAIL: chma@mbari.org (831) 775-1706	<Doc>
	Thursday, June 27, 2019	Filename: <Filename> Sheet 1 of

OPTION 4 - USE FUJINON MOTORS, FEEDBACK & DRIVER WITH DIGITAL CONTROL INPUT.

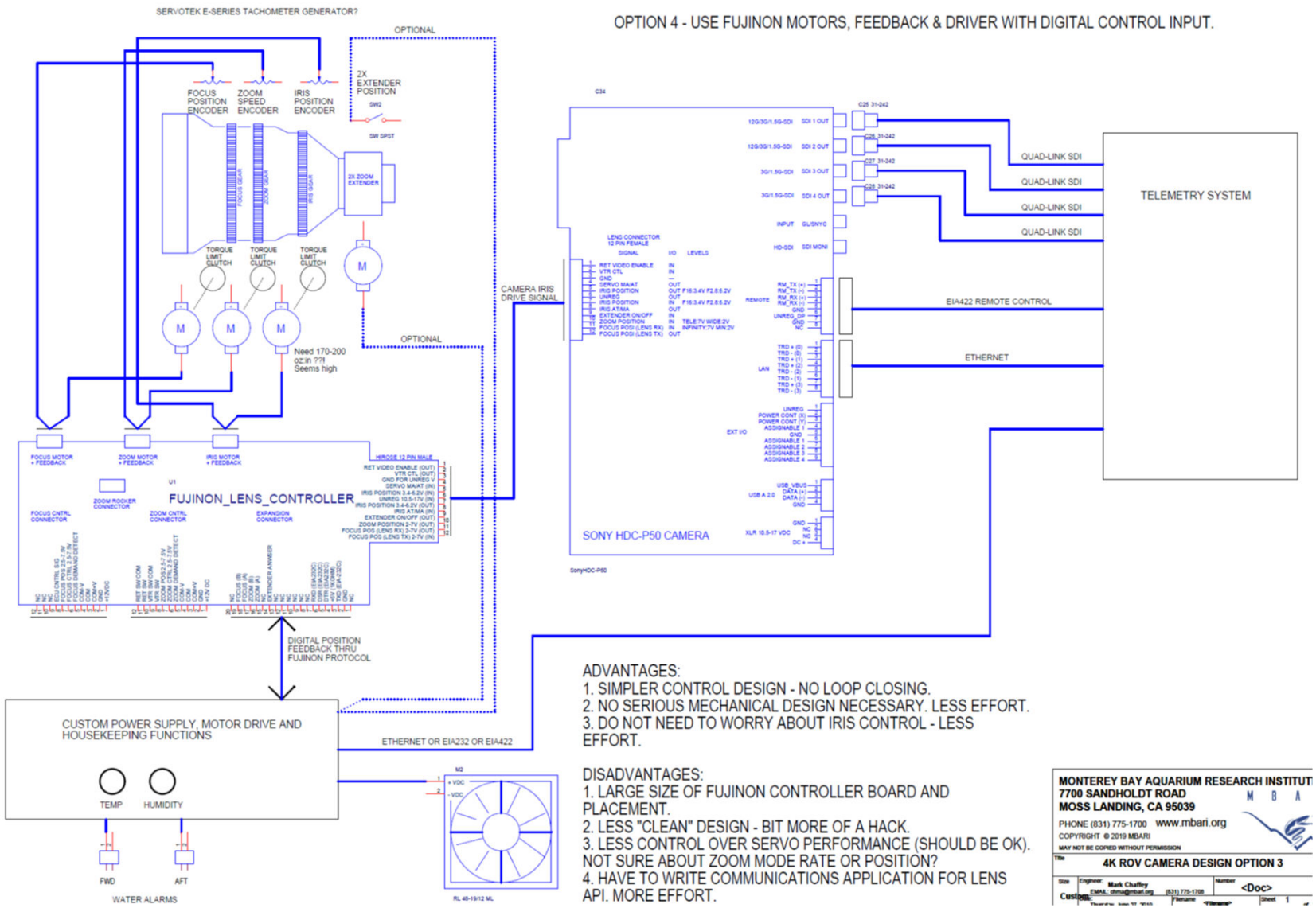

ADVANTAGES:
1. SIMPLER CONTROL DESIGN - NO LOOP CLOSING.
2. NO SERIOUS MECHANICAL DESIGN NECESSARY. LESS EFFORT.
3. DO NOT NEED TO WORRY ABOUT IRIS CONTROL - LESS EFFORT.

DISADVANTAGES:
1. LARGE SIZE OF FUJINON CONTROLLER BOARD AND PLACEMENT.
2. LESS "CLEAN" DESIGN - BIT MORE OF A HACK.
3. LESS CONTROL OVER SERVO PERFORMANCE (SHOULD BE OK). NOT SURE ABOUT ZOOM MODE RATE OR POSITION?
4. HAVE TO WRITE COMMUNICATIONS APPLICATION FOR LENS API. MORE EFFORT.

MONTEREY BAY AQUARIUM RESEARCH INSTITUT
7700 SANDHOLDT ROAD
MOSS LANDING, CA 95039
PHONE (831) 775-1700 www.mbari.org

COPYRIGHT © 2019 MBARI
MAY NOT BE COPIED WITHOUT PERMISSION

Title: 4K ROV CAMERA DESIGN OPTION 3

Engineer: Mark Chaffey
EMAIL: chma@mbari.org (831) 775-1708

Number: <Doc>

Sheet 1

TIBURON HDTV LAPBOX PRELIMINARY DESIGN REVIEW (WAGO 750 I/O FIELDBUS)

Tuesday, September 20, 2005

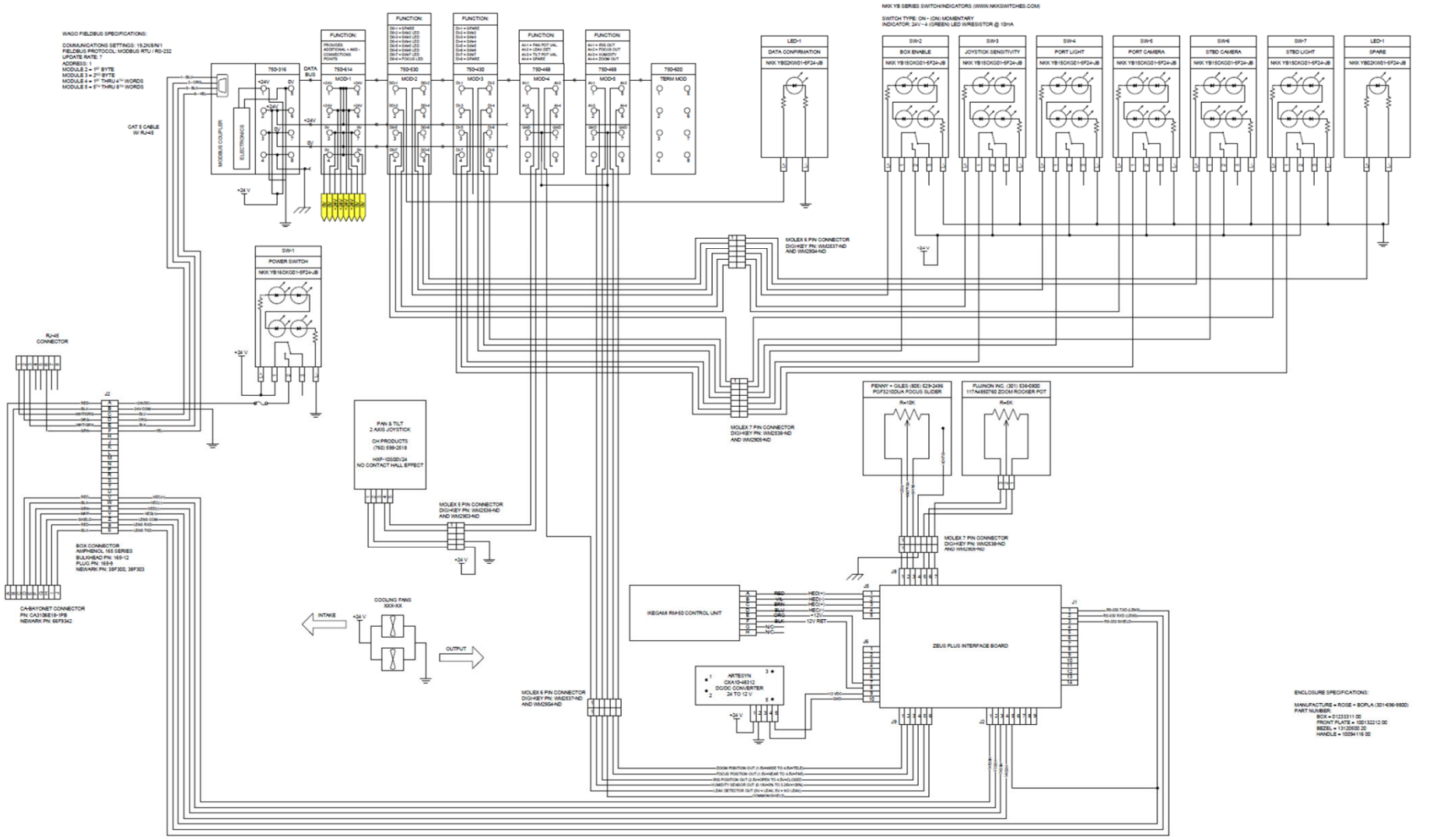

Current Lapbox Design

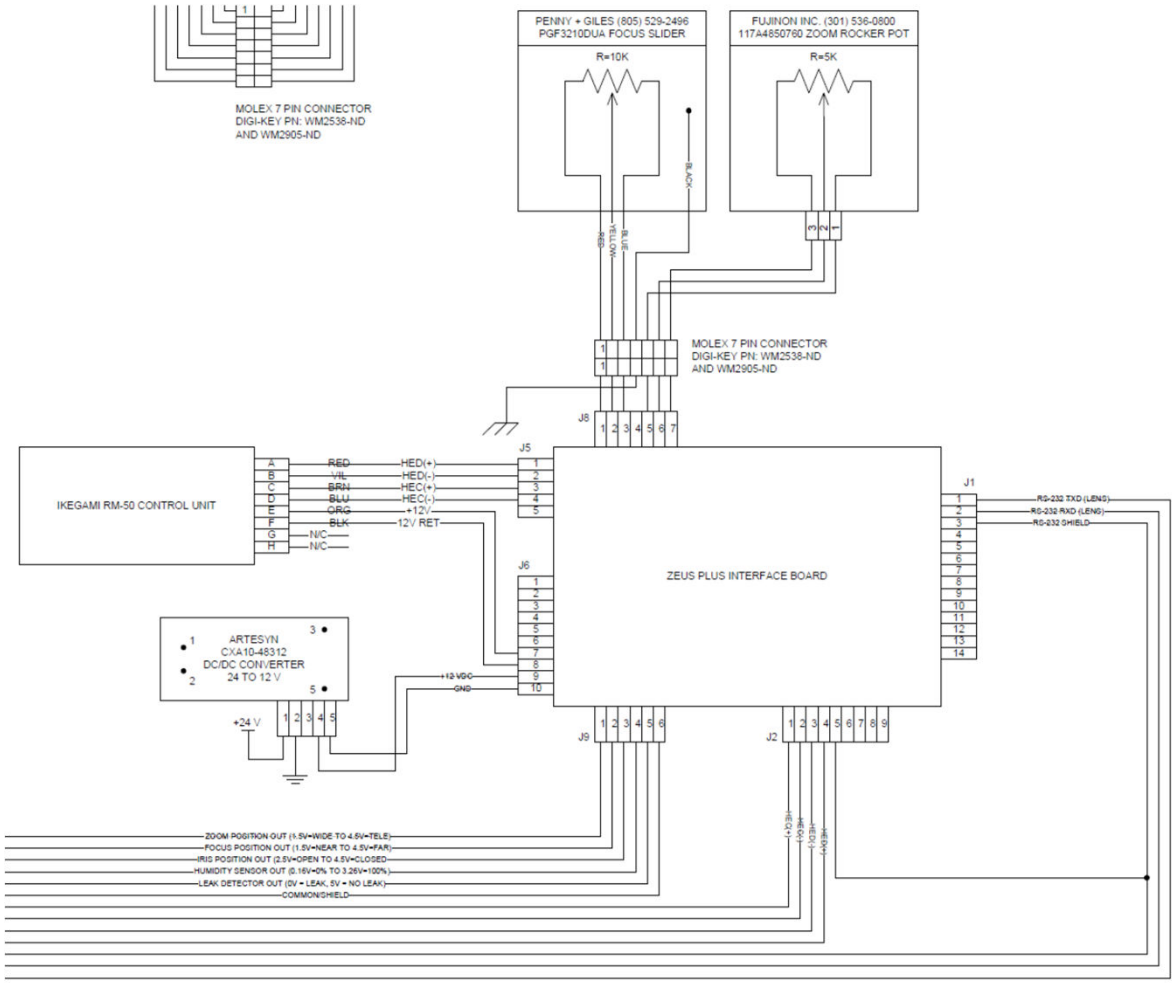

Fujinon Lens Control Interfaces

■ CONNECTOR FOR FOCUS CONTROL

HR10G-10R-12S (HIROSE)

	SIGNAL	
1	+V	(+12V DC)
2	GND	GND
3	COM+V	(7.5V DC)
4	COM (5.0V DC)	(5.0V DC)
5	COM-V	(2.5V DC)
6	FOCUS DEMAAND DETECT	(ANALOG DEMAND= +12V , DIGITAL DEMAND = 5V)
7	FOCUS CONTROL	(Far = 7.5V , Near = 2.5V)
8	FOCUS POSITION	(Far = 2.5V , Near = 7.5V)
9	ECU CONTROL SIGNAL	
10	N.C.	
11	N.C.	
12	N.C.	

■ CONNECTOR FOR ZOOM CONTROL

HR10G-10R-12S (HIROSE)

	SIGNAL	
1	+V	(+12V DC)
2	GND	GND
3	COM+V	(7.5V DC)
4	COM	(5.0V DC)
5	COM-V	(2.5V DC)
6	ZOOM DEMAND DETECT	(ANALOG DEMAND= OPEN , DIGITAL DEMAND = 5V)
7	ZOOM CONTROL	(WIDE = 7.5V , TELE = 2.5V)
8	ZOOM POSITION	(WIDE = 2.5V , TELE = 7.5V)
9	VTR SW	
10	VTR SW COM	
11	RET SW	
12	RET SW COM	

■ CONNECTOR FOR EXPANSION

HR25-9R-20S (HIROSE)

	SIGNAL	
1	N.C.	
2	GND	
3	TxD	(RS-232C)
4	+5V	(1kΩ)
5	DTR	(RS-232C)
6	DSR	(RS-232C)
7	RxD	(RS-232C)
8～13	N.C.	
14	EXTENDER ANSWER	×2=L (＜0.5V)
15	N.C.	
16	ZOOM(A)	
17	ZOOM(B)	
18	FOCUS(A)	
19	FOCUS(B)	
20	N.C.	

Fujinon Lens to Camera Interface

No.	Signal	I/O	Specifications
1	RET VIDEO ENABLE	IN	• ENABLE: 0 V • DISABLE: +5 V or OPEN
2	VTR CTL	IN	• ENABLE: 0 V • DISABLE: +5 V or OPEN
3	GND	–	GND for UNREG
4	SERVO MA/AT	OUT	• AUTO: +5 V • MANU: 0 V or OPEN
5	IRIS POSITION	OUT	+3.4 V (F16) to +6.2 V (F2.8)
6	UNREG	OUT	+10.5 V to +17 V
7	IRIS POSITION	IN	+3.4 V (F16) to +6.2 V (F2.8)
8	IRIS AT/MA	OUT	• AUTO IRIS: 0 V • MANUAL IRIS: +5 V
9	EXTENDER ON/OFF	IN	• EX 2 ON: GND • EX 0.8 ON: 30 kΩ to GND • OFF: OPEN 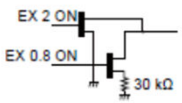
10	ZOOM POSITION	IN	• WIDE: 2 V • TELE: 7 V
11	FOCUS POSI (LENS RX)	IN	• ∞: 7 V • min.: 2 V
12	FOCUS POSI (LENS TX)	OUT	–

Older HD lens

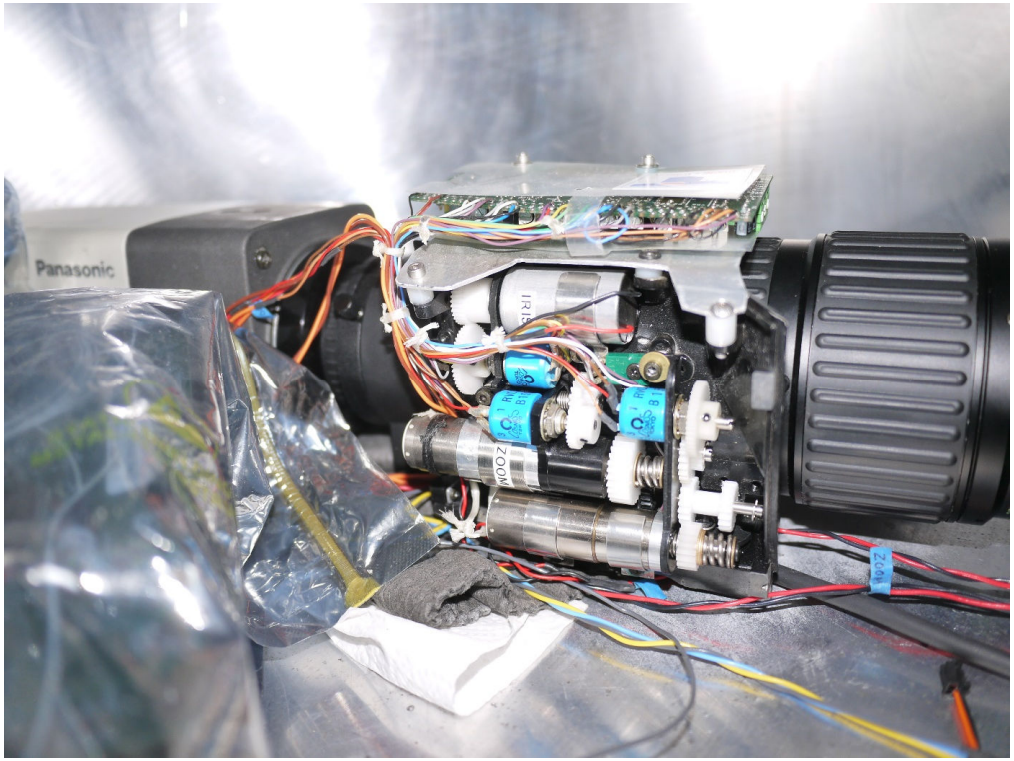

Possible technology

- Ethernet to fiber converters
  - https://fibertronics.com/2-port-switch-101001000-rj45-to-2-sfp-ports
  - https://fibertronics.com/101001000base-t-to-sfp-ethernet-media
  - https://www.blackbox.com/en-us/store/Detail.aspx/Pure-Networking-Copper-to-Fiber-Media-Converter---10-100BASE-TX-to-100BASE-FX-SFP/LHC210A
  - https://www.perle.com/products/10-100-poe-media-converters.shtml#applicationdiagrams
- Encoders
  - https://ecatalog.dynapar.com/ecatalog/incremental-encoders/en/E9?_ga=2.158800634.171294003.1560294496-1192861477.1560294496

Lens Drive Motors & Encoders

- Drive motors
  - Maxon
  - www.faulhaber.com
- Torque limit clutches
  - https://dynatect.com/product/clutches/mechanical-slip-clutches/series-16/
  - https://shop.sdp-si.com/catalog/?brand=sdp&cid=p680