THE INFORMATION CONTAINED IN THIS DRAWING IS THE SOLE PROPERTY OF MBARI ANY REPRODUCTION IN PART OR WHOLE WITHOUT THE WRITTEN PERMISSION OF MBARI IS PROHIBITED.

REVISIONS		
INITIAL RELEASE	X/XX/01	J.E.

REVISIONS				
ZONE	REV.	DESCRIPTION	DATE	APPROVED

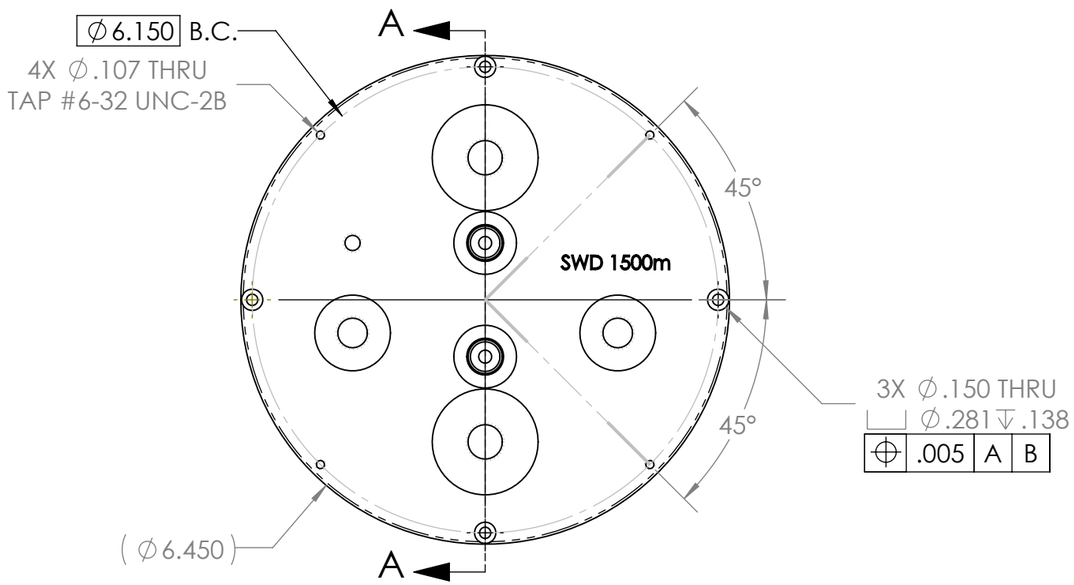

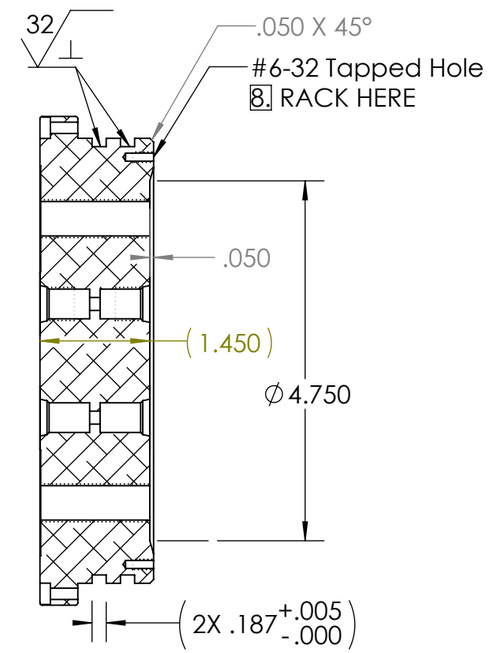

SECTION A-A

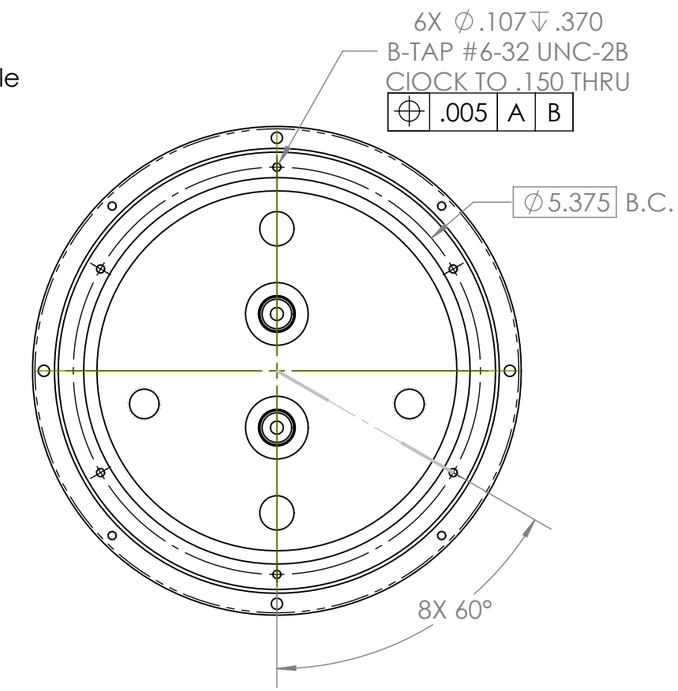

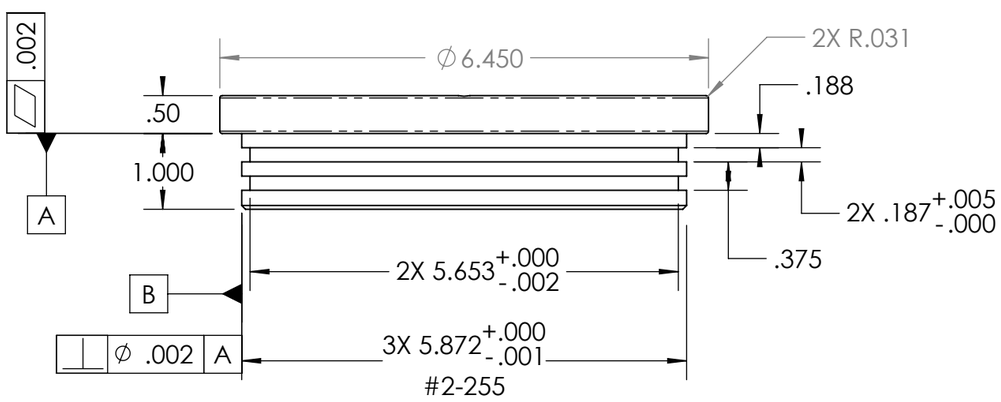

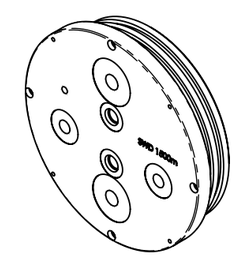

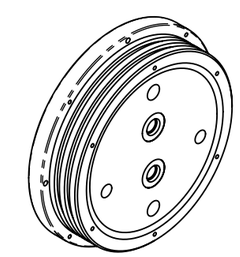

8. Finish: HARD CLEAR ANODIZE IN ACCORDANCE WITH MIL-A-8625F TYPE III, CLASS ! (.001 THICK) TEFLON SEAL COAT. RACK AS SHOWN.

7. PROJECT LIBRARY:\902004_Planktivore\Housing_2022\PlantivoreCase_1500m

NOTES: (CONT. FROM TITLE BLOCK)

ITEM NO.	QTY.	Part_Number	DESCRIPTION	Vendor	MATERIAL
1	1	P-221759-22	Planktivor 1500m Rear End Cap	MBARI	6061-T6 (SS)

BILL OF MATERIALS

Shop / Q.C.	
Inspector	
Shop Foreman	
Engineer	
NEXT ASSY Description	NEXT ASSY Number
Application	

UNLESS OTHERWISE SPECIFIED TOLERANCES ARE:

1 PLACE DIM ±1/16	2 PLACE DIM ±.02	3 PLACE DIM ±.005	ANGLES ±1°

1. DIMENSIONS ARE IN INCHES
2. DIMENSION LIMITS HELD AFTER PLATING.
3. REMOVE BURRS AND SHARP EDGES .015 MAX.
4. MACHINED FILLET RADII .0150-.030.
5. MACHINED DIAMETERS ON A COMMON CENTERLINE CONCENTRIC WITHIN .OO5
6. PERPENDICULARITY & PARALLELISM OF MACHINED SURFACES .002 PER INCH. MAX .012 INCHES FOR SINGLE SURFACE.

DO NOT SCALE DRAWING

APPROVALS		DATE
DRAWN	J. ERICKSON	10/17/22
ENGINEER	J. ERICKSON	10/17/22
CHECKED		
PROJECT NO.	902004	
PROJECT	Planktivor	
WEIGHT	3.940	

Monterey Bay Aquarium Research Institute
MBARI
7700 Sandholdt RD.
Moss Landing, CA 95039
PH: (831) 775-1700

PLANKTIVOR

Planktivor 1500m Rear End Cap

SIZE	DWG. NO.	REV.
B	P-221759-22.DWG	

SCALE 1:2 | CAD FILE: MECH ENG ON TORNADO | SHEET 1 OF 2

THE INFORMATION CONTAINED IN THIS DRAWING IS THE SOLE PROPERTY OF MBARI ANY REPRODUCTION IN PART OR WHOLE WITHOUT THE WRITTEN PERMISSION OF MBARI IS PROHIBITED.

REVISIONS			
REV.	DESCRIPTION	DATE	APPROVED
	INITIAL RELEASE	X/XX/00	J.E.

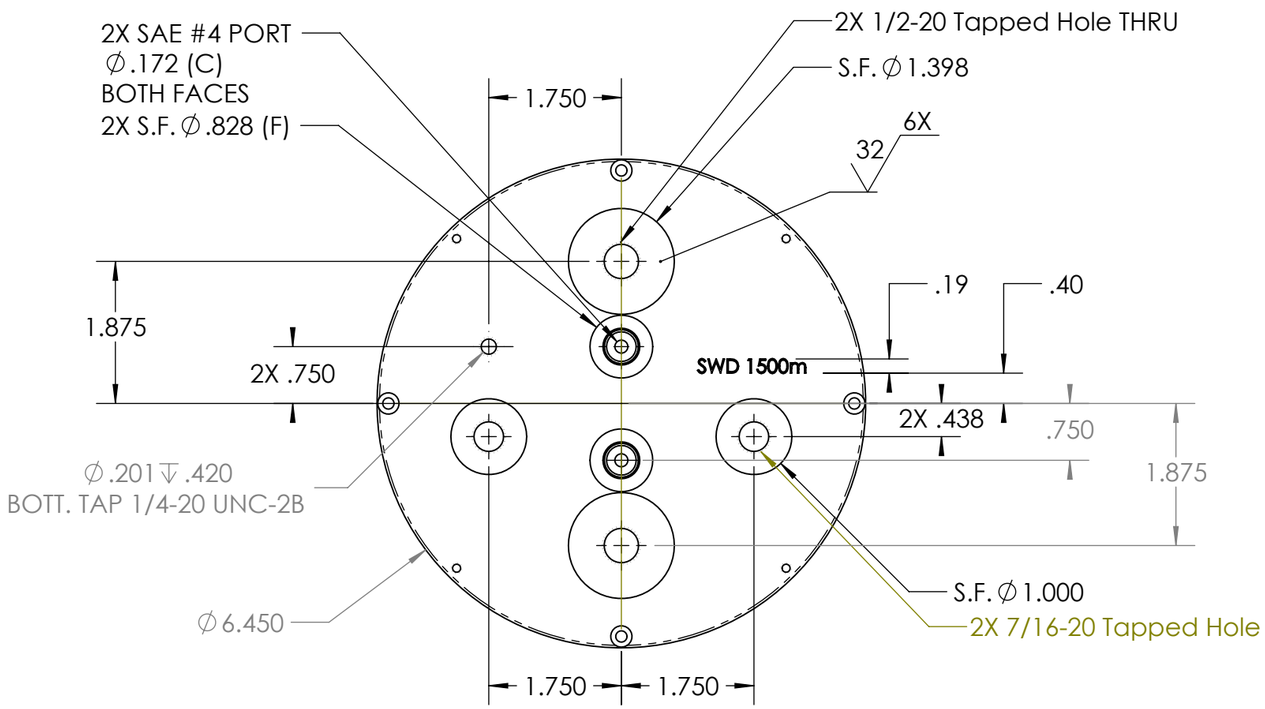

7. PROJECT LIBRARY:\902004_Planktivore\Housing_2022\PlantivoreCase_1500m

NOTES: (CONT. FROM TITLE BLOCK)

ITEM NO.	QTY.	PART NO.	DESCRIPTION	VENDOR	MATERIAL SPECIFICATION

BILL OF MATERIALS

Shop / Q.C.	
Inspector	
Shop Foreman	
Engineer	
NEXT ASSY Description	NEXT ASSY Number
Application	

UNLESS OTHERWISE SPECIFIED TOLERANCES ARE:

1 PLACE DIM	2 PLACE DIM	3 PLACE DIM	ANGLES
±1/16	±.02	±.005	±1°

1. DIMENSIONS ARE IN INCHES
2. DIMENSION LIMITS HELD AFTER PLATING.
3. REMOVE BURRS AND SHARP EDGES .015 MAX.
4. MACHINED FILLET RADII .0150-.030.
5. MACHINED DIAMETERS ON A COMMON CENTERLINE CONCENTRIC WITHIN .005
6. PERPENDICULARITY & PARALLELISM OF MACHINED SURFACES .002 PER INCH. MAX .012 INCHES FOR SINGLE SURFACE.

DO NOT SCALE DRAWING

APPROVALS		DATE
DRAWN	J. ERICKSON	10/17/22
ENGINEER	J. ERICKSON	10/17/22
CHECKED		
PROJECT NO.	902004	
PROJECT	Planktivor	
WEIGHT	3.940 lb.	

Monterey Bay Aquarium Research Institute
MBARI
7700 Sandholdt RD.
Moss Landing, CA 95039
PH: (831) 775-1700

PLANKTIVOR

Planktivor 1500m Rear End Cap

SIZE	DWG. NO.	REV.
B	P-221759-22.DWG	

SCALE 1:2 | CAD FILE: MECH ENG ON TORNADO | SHEET 2 OF 2