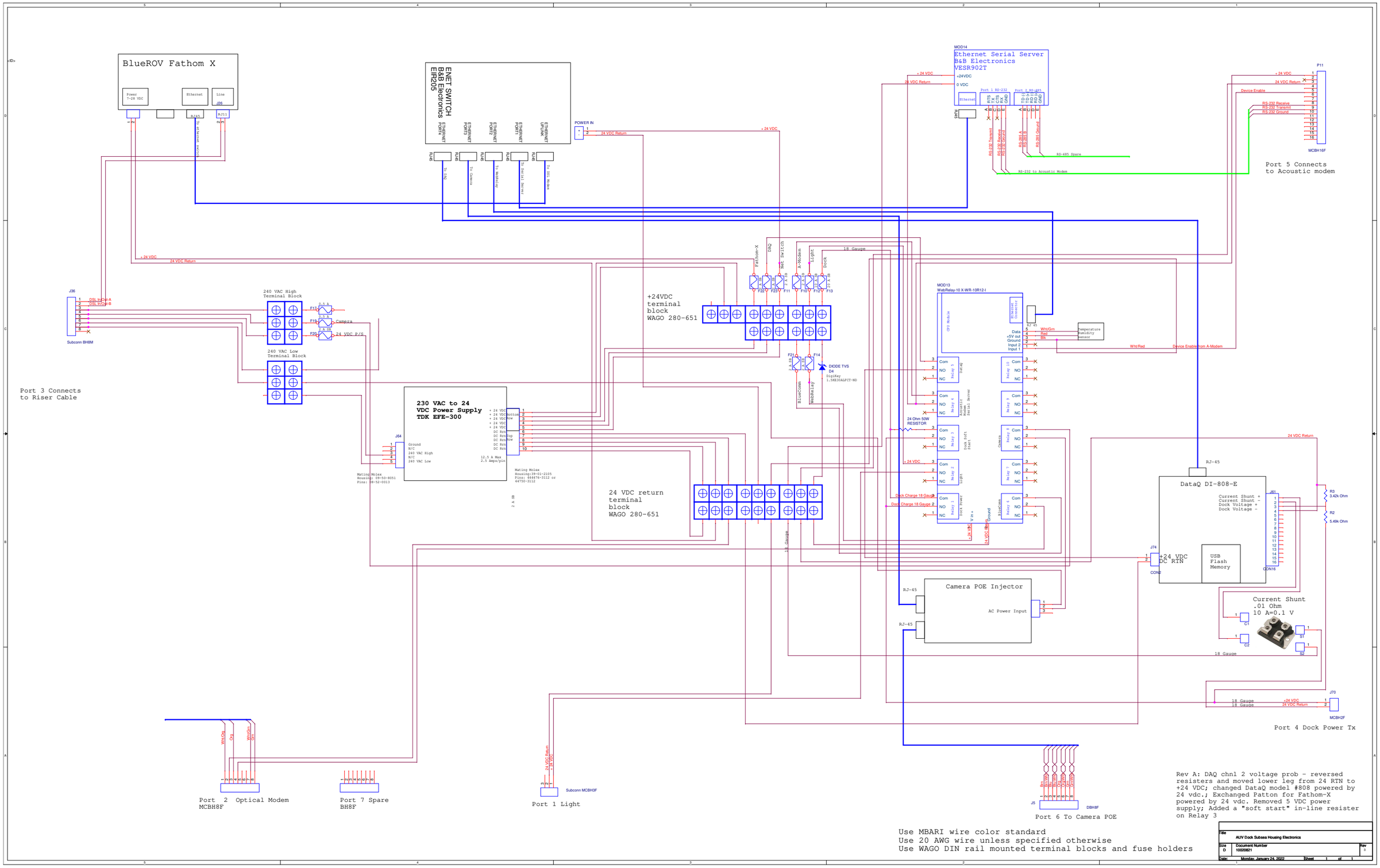
BlueROV Fathom X
Power 7-28 VDC
Ethernet
Line
J26
RJ45
RJ11
To ethernet switch
ENET SWITCH
B&B Electronics
EIR205
ETHERNET PORT4
ETHERNET PORT3
ETHERNET PORT2
ETHERNET PORT1
ETHERNET UPLINK
To DAQ
To Camera
To WebRelay
To Serial Server
To 900 Modem
POWER IN
24 VDC Return
+ 24 VDC
MOD14
Ethernet Serial Server
B&B Electronics
VESR902T
+24VDC
0 VDC
Port 1 RS-232
Port 2 RS-485
RS-232 Transmit
RS-232 Receive
RS-232 Ground
RS-485 Ground
RS-485 Spare
RS-232 to Acoustic Modem
P11
MCBH16F
Device Enable
RS-232 Receive
RS-232 Transmit
RS-232 Ground
Port 5 Connects
to Acoustic modem
J36
DSL-B-Dat-A
DSL-B-Dat-B
Subconn BH8M
240 VAC High
Terminal Block
240 VAC Low
Terminal Block
F12
F19
F20
0.5 A
2.0 A
2.5 A SB
Camera
24 VDC P/S
Port 3 Connects
to Riser Cable
230 VAC to 24
VDC Power Supply
TDK EFE-300
Ground
N/C
240 VAC High
N/C
240 VAC Low
+ 24 VDC Bottom
+ 24 VDC Top
DC Rtn Bottom
DC Rtn Top
12.5 A Max
2.5 Amps/pin
J64
Mating Molex
Housing: 09-50-8051
Pins: 08-52-0113
Mating Molex
Housing:39-01-2105
Pins: 444476-3112 or
44750-3112
+24VDC
terminal
block
WAGO 280-651
24 VDC return
terminal
block
WAGO 280-651
Fathom-X
DAQ
Switch
A-Modem
Light
Dock
18 Gauge
F22
F23
F11
F10
F12
F13
F21
F14
2.5 SB
DIODE TVS
D4
DigiKey
1.5KE30ALFCT-ND
BlueComm
WebRelay
MOD13
WebRelay-10 X-WR-10R12-I
CPU Module
Ethernet Connector
J2 45
Data
+5V out
Ground
Input 2
Input 1
Wht/Grn
Red
Blk
Temperature
Humidity
sensor
Wht/Red
Device Enable from A-Modem
Relay 1
Relay 2
Relay 3
Relay 4
Relay 5
Relay 6
Relay 7
Relay 8
Com
NO
NC
DAQ
Acoustic
Serial Server
Dock Soft
Start
Light
Dock Power
Cameras
24 Ohm 50W
RESISTOR
Dock Charge 18 Gauge
Dock Charge 18 Gauge
V in +
Ground
Blue
Blue/Green
RJ-45
DataQ DI-808-E
Current Shunt +
Current Shunt -
Dock Voltage +
Dock Voltage -
J61
CON16
USB
Flash
Memory
R3
3.42k Ohm
R2
5.49k Ohm
J74
+24 VDC
DC RTN
CON2
Camera POE Injector
AC Power Input
Current Shunt
.01 Ohm
10 A=0.1 V
C1
C2
S1
S2
J70
MCBH2F
Port 4 Dock Power Tx
Wht/Org
Org
Wht/Grn
Grn
Port 2 Optical Modem
MCBH8F
Port 7 Spare
BH8F
Subconn MCBH3F
Port 1 Light
Wht/Grn
Grn
Wht/Blu
Blu
Wht/Org
Org
Wht/Brn
Brn
J5
DBH8F
Port 6 To Camera POE
Rev A: DAQ chnl 2 voltage prob - reversed
resisters and moved lower leg from 24 RTN to
+24 VDC; changed DataQ model #808 powered by
24 vdc.; Exchanged Patton for Fathom-X
powered by 24 vdc. Removed 5 VDC power
supply; Added a "soft start" in-line resister
on Relay 3
Use MBARI wire color standard
Use 20 AWG wire unless specified otherwise
Use WAGO DIN rail mounted terminal blocks and fuse holders
Title
AUV Dock Subsea Housing Electronics
Size
D
Document Number
10020821
Rev
B
Date:
Monday, January 24, 2022
Sheet
1
of
1