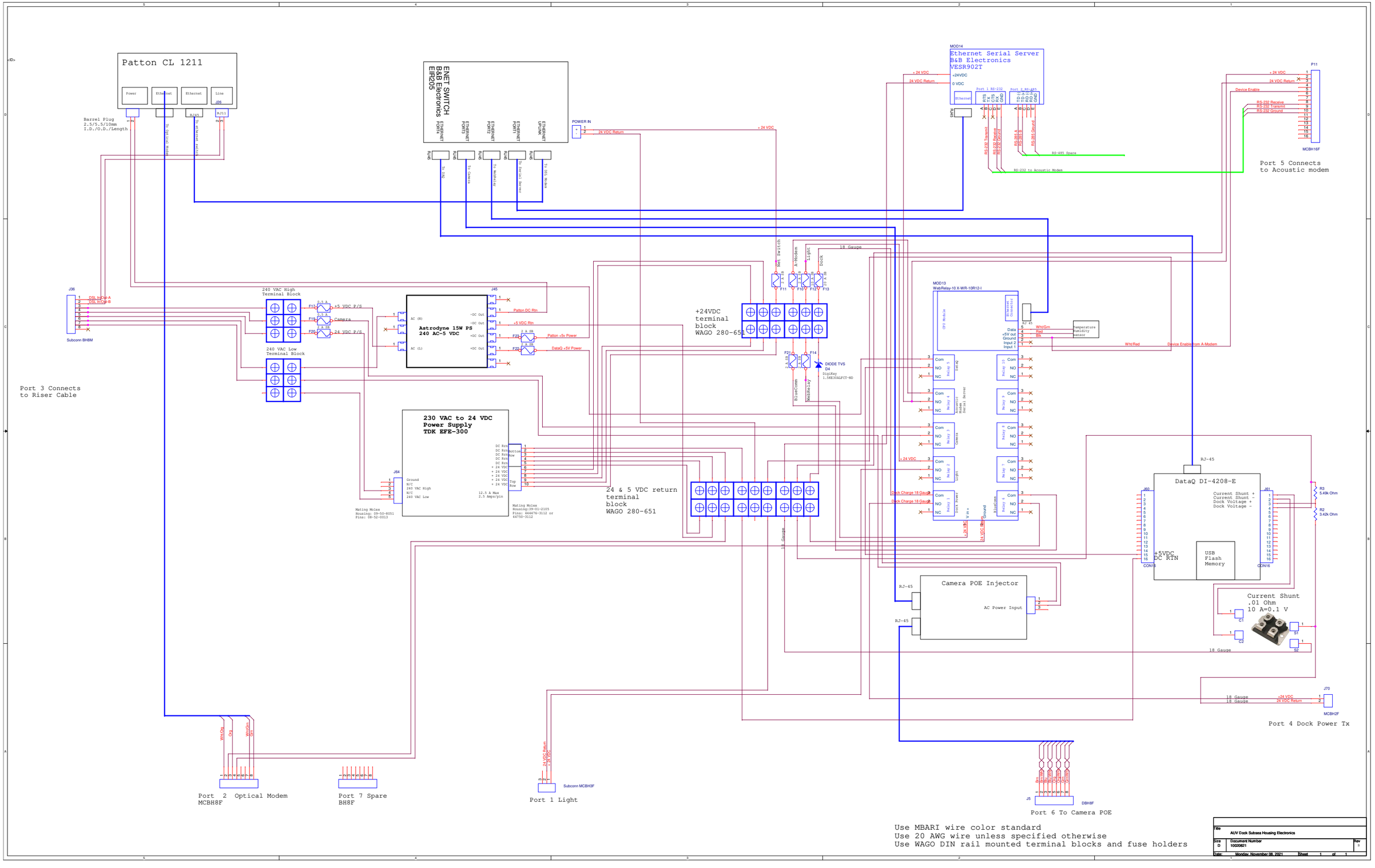

Use MBARI wire color standard
Use 20 AWG wire unless specified otherwise
Use WAGO DIN rail mounted terminal blocks and fuse holders

Title	AUV Dock Subsea Housing Electronics	
Size D	Document Number 10020821	Rev B
Date: Monday, November 08, 2021	Sheet 1 of 1	