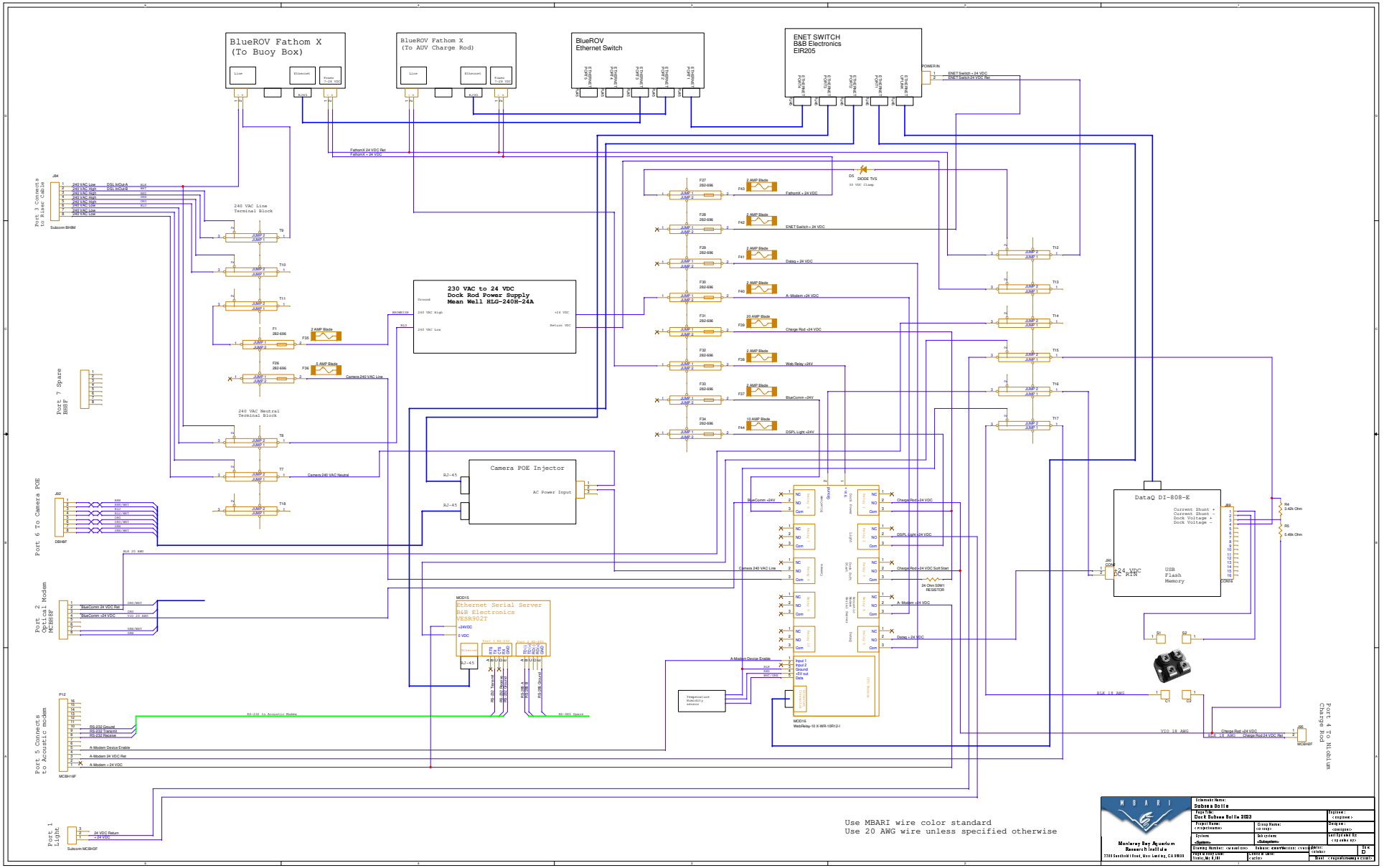
BlueROV Fathom X
(To Buoy Box)
BlueROV Fathom X
(To AUV Charge Rod)
BlueROV
Ethernet Switch
ENET SWITCH
B&B Electronics
EIR205
230 VAC to 24 VDC
Dock Rod Power Supply
Mean Well HLG-240H-24A
240 VAC Line
Terminal Block
240 VAC Neutral
Terminal Block
Camera POE Injector
AC Power Input
Ethernet Serial Server
B&B Electronics
VESR902T
DataQ DI-808-E
USB
Flash
Memory
Port 3 Connects to Riser Cable
Port 7 Spare
Port 6 To Camera POE
Port 2 Optical Modem
Port 5 Connects to Acoustic modem
Port 1 Light
Port 4 To Niobium Charge Rod
Use MBARI wire color standard
Use 20 AWG wire unless specified otherwise
MBARI
Monterey Bay Aquarium Research Institute
Schematic Name:
Subsea Bottle
Dock Subsea Bottle 2023