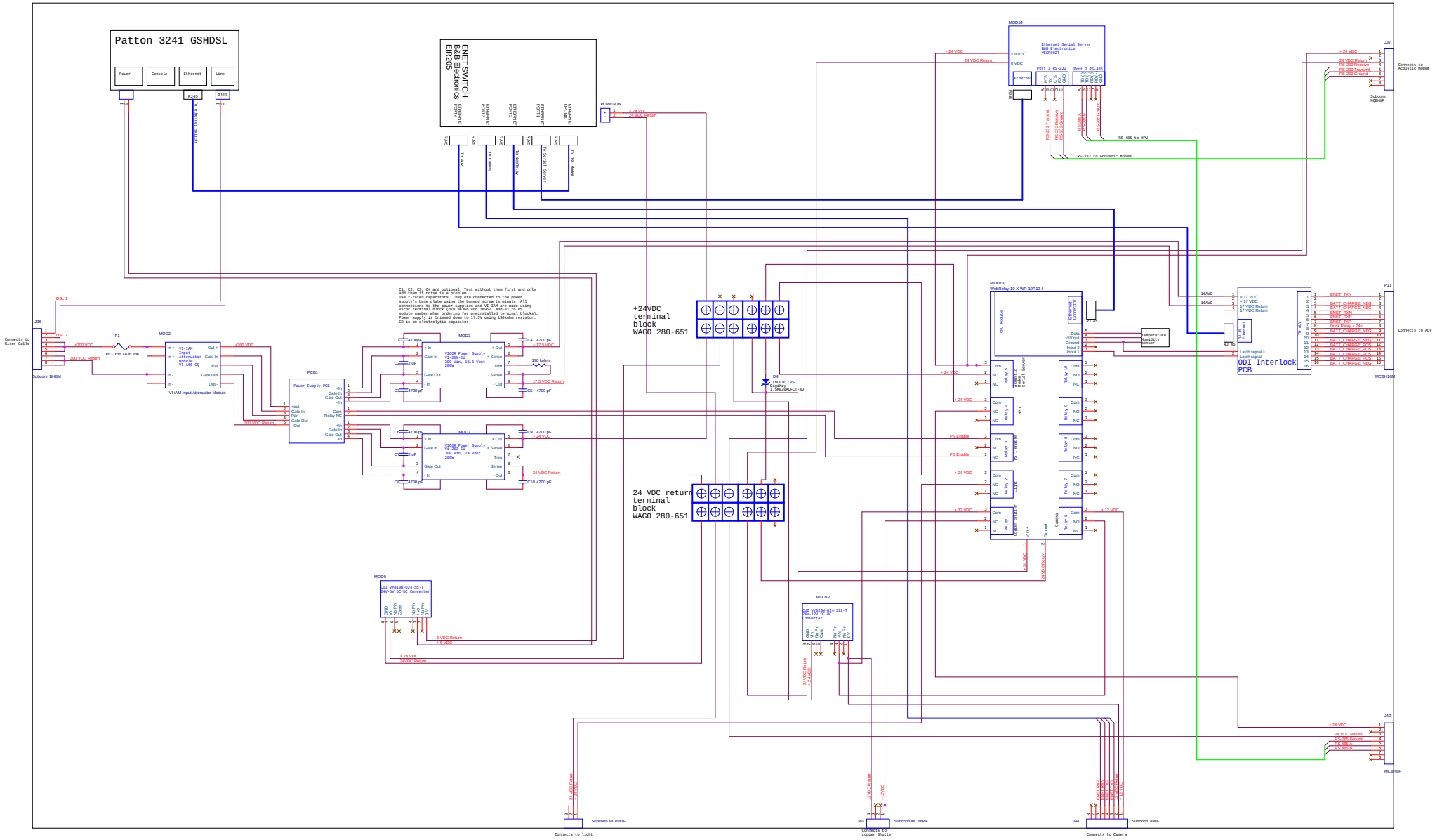


Use MBARI wire color standard
Use 20 AWG wire unless specified otherwise
Use WAGO DIN rail mounted terminal blocks and fuse holders

| | | | |
|---|---|---|---|
| Title | AUV Dock Subsea Housing Electronics | | |
| Size D | Document Number 1002082L | | Rev |
| Date: Thursday, May 30, 2013 | | Sheet 1 of 1 | |