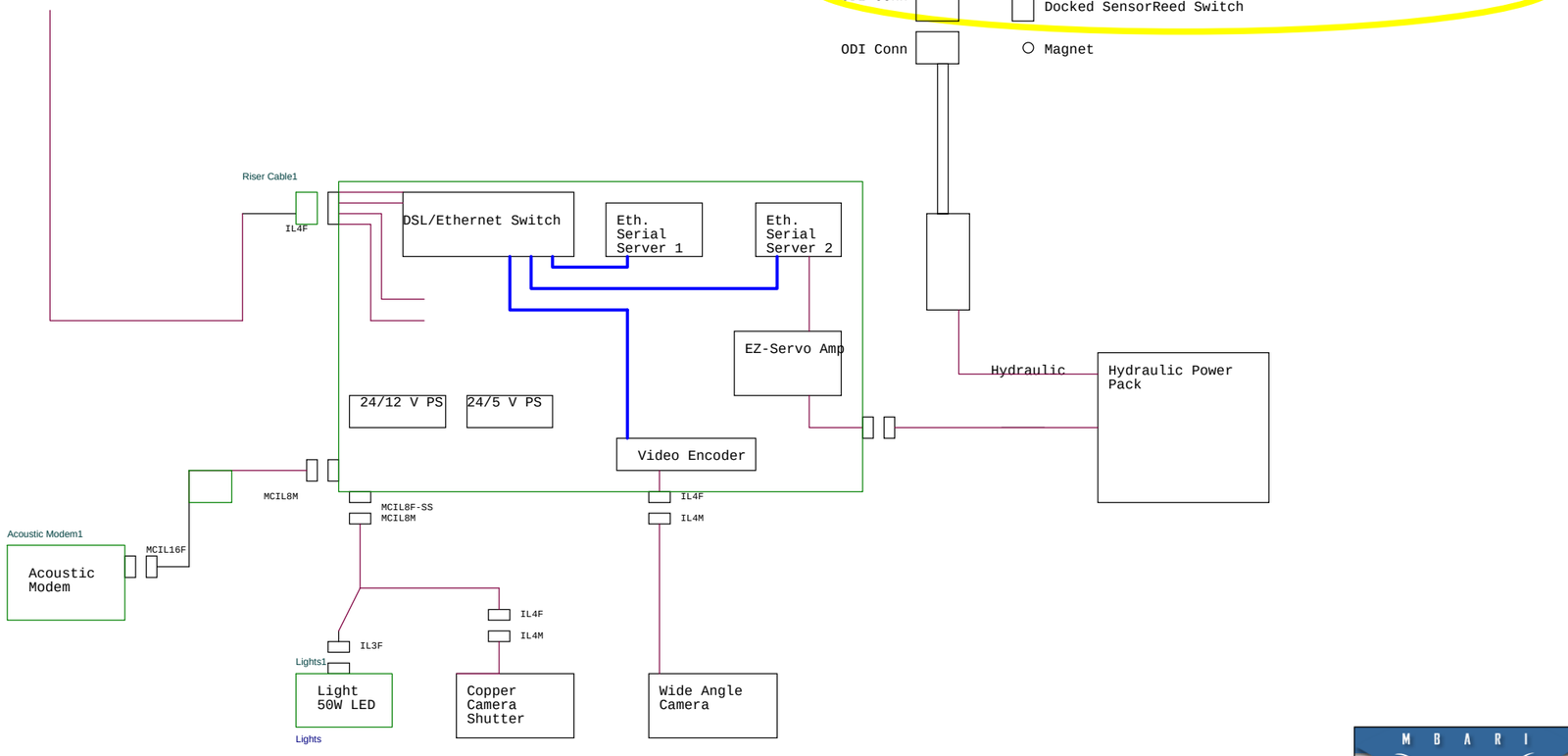

M B A R I	Monterey Bay Aquarium Research Institute 7700 Sandholt Road, Moss Landing, CA 95039		
	Title		
Engineer <Engineer>	Size C	Document Number <Doc>	Layout File <Layout File>	Rev <Rev>
Layout <Layout>	Date: Thursday, January 05, 2012	Sheet 1 of 1		