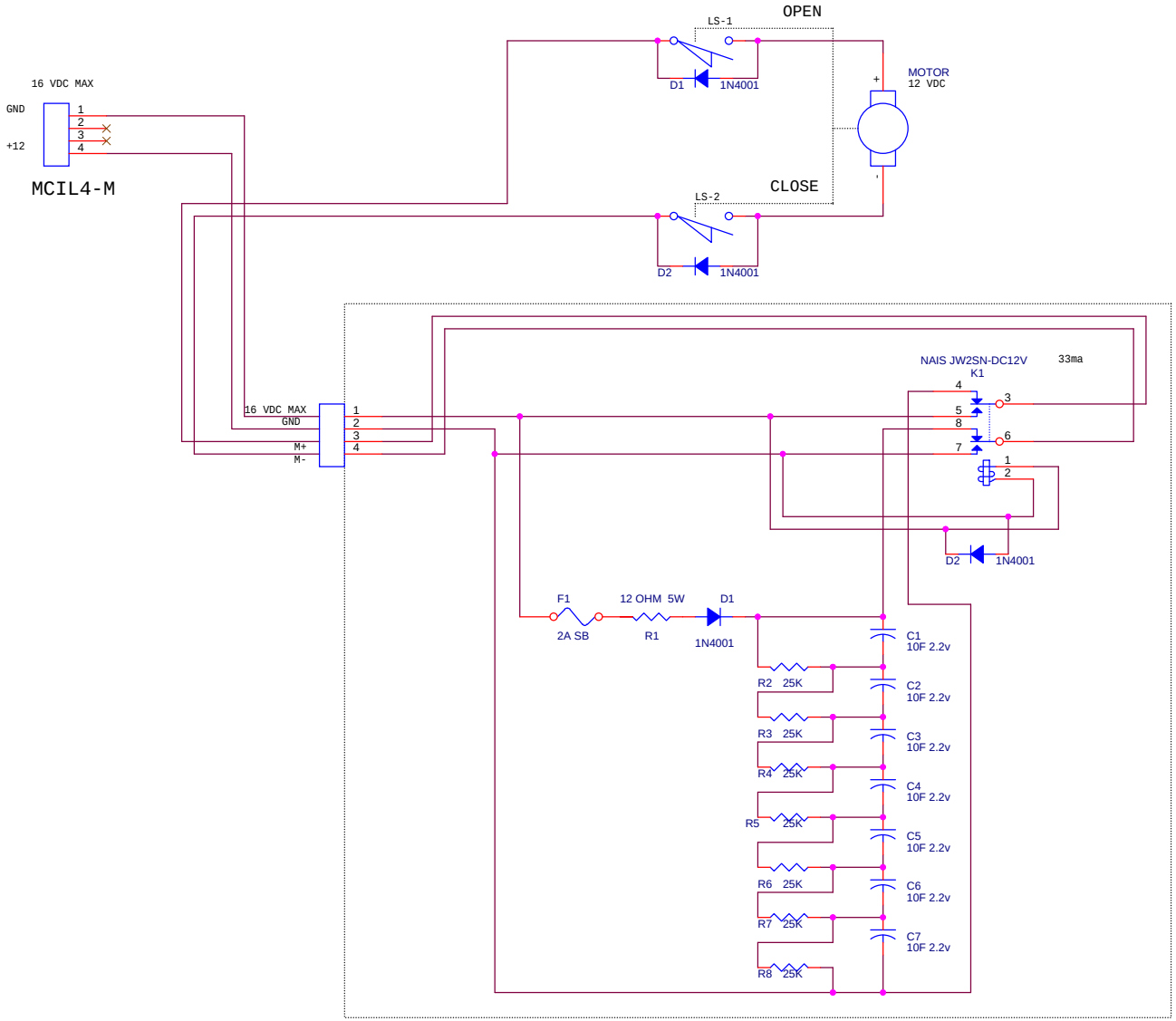

NEW SHUTTER PC BOARD

SHUTTER OPENS WHEN POWER IS APPLIED
AND CLOSES USING STORED DC IN THE
CAP BANK WHEN POWER IS REMOVED

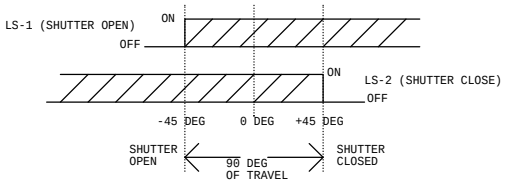

CAM OVERLAP BOTH MICROSWITCHES
THROUGH 90 DEGREES OF SHAFT ROTATION

INITIAL RELEASE 7/29/03
8/6/03 Change INPUT PINOUT

Title	PASSIVE SHUTTER CONTROL	
Size B	Document Number <Doc>	Rev A
Date: Wednesday, August 06, 2003	Sheet 1 of 1	