REVISIONS				
ZONE	REV	DESCRIPTION	DATE	APPROVED
		INITIAL RELEASE	6/23/97	MB
	A	PROJECT # 9801T1 WAS 974100	6/23/97	MB

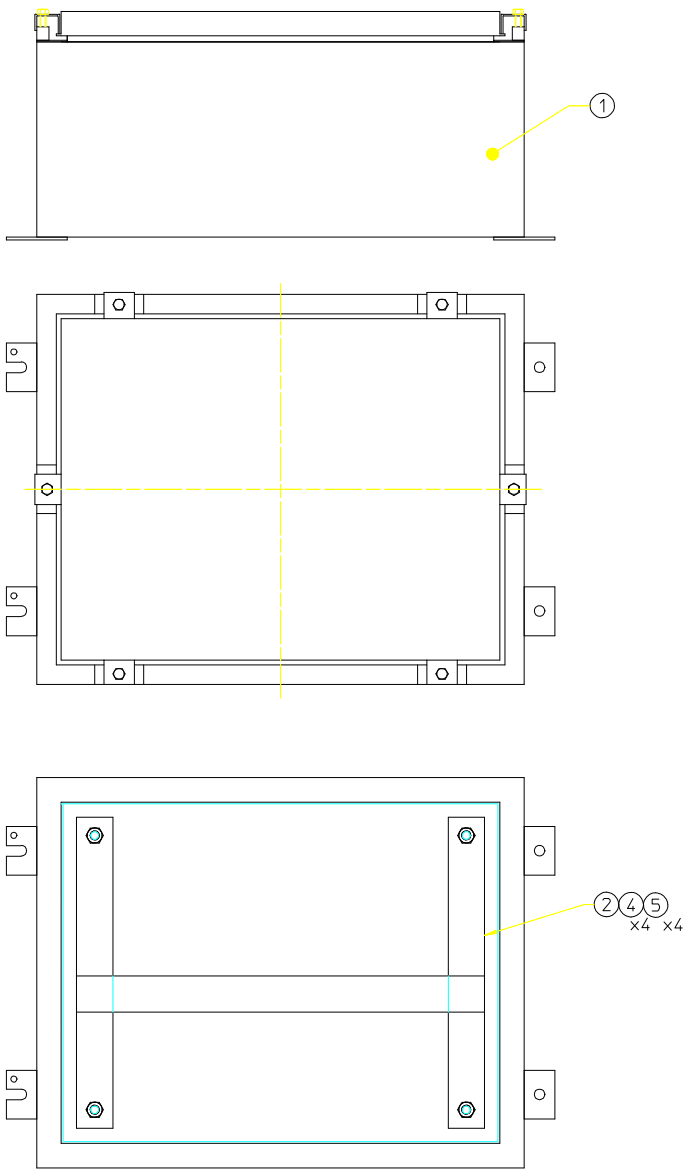

SECTION A-A

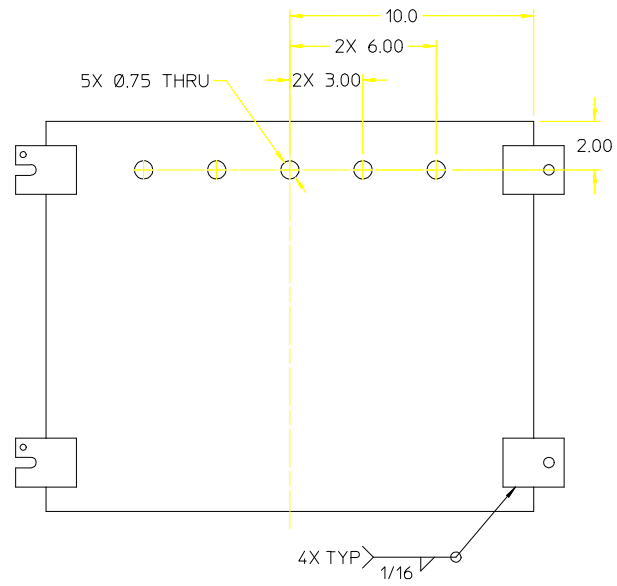

BACK VIEW

QUANTITY	ITEM	PART NUMBER	DESCRIPTION	SPECIFICATION
4	6		HEX HD BOLT	3/8-16 UNC-2A x 1/2" LG. STN STL 316
8	5		LOCKWASHER	3/8 STN STL
4	4		NUT	3/8-16 UNC-2B STN STL
2	3		CLAMP	UHMW: 4" WIDE x 1.5" THK
1	2		BATTERY STRAP	STN. STL. SHEET: 1-1/2" WIDE x .075" THK
1	1		JUNCTION BOX	HOFFMAN: A-20H1608SS6LP

LIST OF MATERIAL

NOTES: (CONT. FROM TITLE BLOCK)

UNLESS OTHERWISE SPECIFIED
DO NOT SCALE DRAWING

1 PLACE DIM.	2 PLACE DIM.	3 PLACE DIM	ANGLES
±1/16	±.02	±.005	±1°

1. DIMENSIONS ARE IN INCHES.
2. DIMENSION LIMITS HELD AFTER PLATING.
3. REMOVE BURRS & SHARP EDGES .015 MAX.
4. MACHINED FILLET RADII .015-.030.
5. MACHINED DIAMETERS ON A COMMON CENTERLINE MUST BE CONCENTRIC WITHIN .005 T.I.R UNMACHINED DIAMETERS CONCENTRIC WITHIN .030 T.I.R.
6. PERPENDICULARITY & PARALLELISM OF MACHINED SURFACES .002 PER INCH. MAX .012 INCHES FOR SINGLE SURFACE.

DRAWN BY MOB DATE 6/18/97
ENGINEER DATE
CHECKED DATE
APPROVED DATE
PROJECT NO. 9801T1
PROJECT MOORING M3

MBARI
7700 SANDHOLDT RD.
MOSS LANDING, CA 95039
(408) 775-1922
MONTEREY BAY AQUARIUM RESEARCH INSTITUTE

JUNCTION BOX ASSEMBLY

SIZE C | DRAWING NO. 2215-DWG | REV A
SCALE 1:4 | FILE X:/XXX/XXX/XXX | SHEET 1 of 2

REVISIONS				
ZONE	REV	DESCRIPTION	DATE	APPROVED

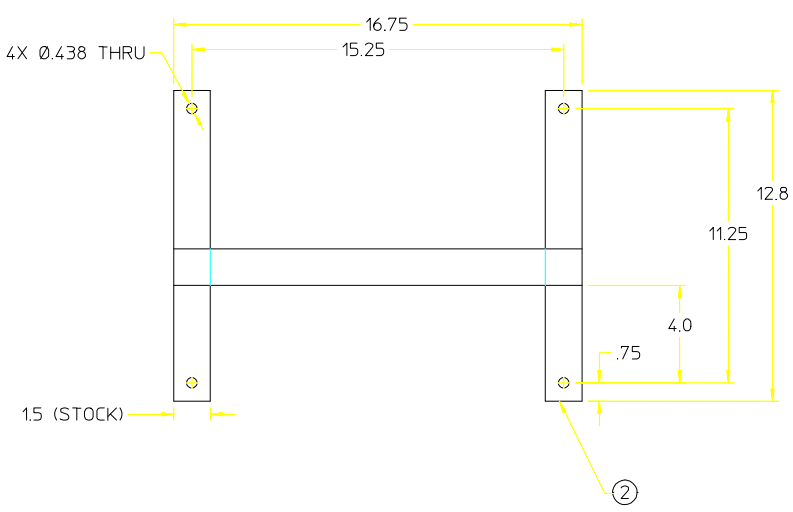

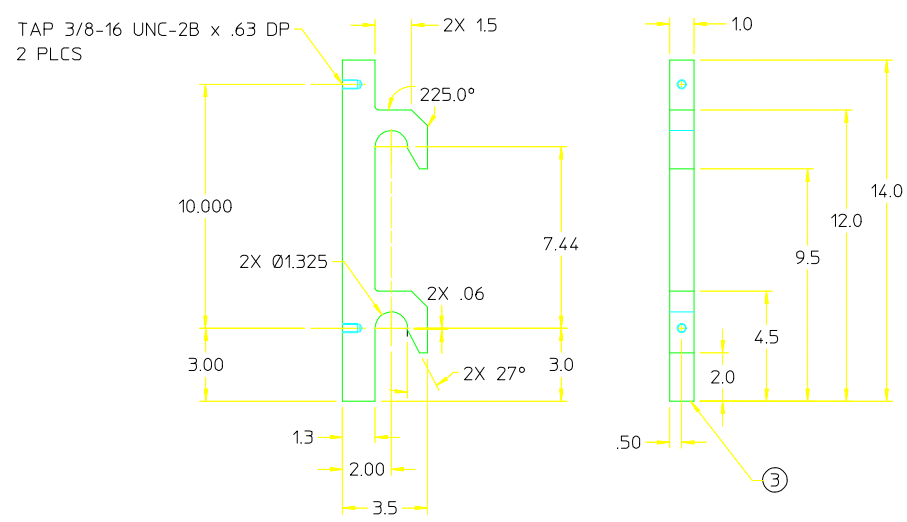

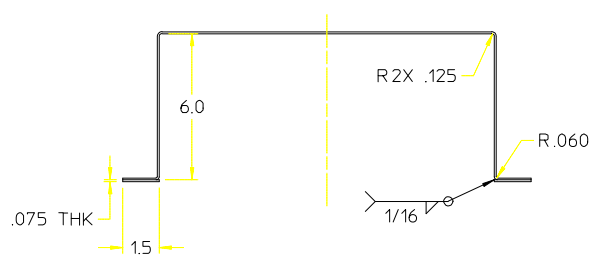

NOTES: (CONT. FROM TITLE BLOCK)

QUANTITY	ITEM	PART NUMBER	DESCRIPTION	SPECIFICATION

LIST OF MATERIAL

UNLESS OTHERWISE SPECIFIED
DO NOT SCALE DRAWING

1 PLACE DIM.	2 PLACE DIM.	3 PLACE DIM	ANGLES
±1/16	±.02	±.005	±1°

1. DIMENSIONS ARE IN INCHES.
2. DIMENSION LIMITS HELD AFTER PLATING.
3. REMOVE BURRS & SHARP EDGES .015 MAX
4. MACHINED FILLET RADII .015-.030
5. MACHINED DIAMETERS ON A COMMON CENTERLINE MUST BE CONCENTRIC WITHIN .005 T.I.R. UNMACHINED DIAMETERS CONCENTRIC WITHIN .030 T.I.R.
6. PERPENDICULARITY & PARALLELISM OF MACHINED SURFACES .002 PER INCH. MAX .012 INCHES FOR SINGLE SURFACE.

DRAWN BY MOB DATE 6/18/97
ENGINEER DATE
CHECKED DATE
APPROVED DATE
PROJECT NO 9801T1
PROJECT MOORING M3

MBARI
7700 SANDHOLDT RD.
MOSS LANDING, CA 95039
(408) 775-1922
MONTEREY BAY AQUARIUM RESEARCH INSTITUTE

JUNCTION BOX ASSEMBLY

SIZE C | DRAWING NO. 2215-DWG | REV A
SCALE 1:4 | FILE X:/XXX/XXX/XXX | SHEET 2 of 2