THE INFORMATION CONTAINED IN THIS DRAWING IS THE SOLE PROPERTY OF MBARI ANY REPRODUCTION IN PART OR WHOLE WITHOUT THE WRITTEN PERMISSION OF MBARI IS PROHIBITED.

REVISIONS			
REV.	DESCRIPTION	DATE	APPROVED
	INITIAL RELEASE	X/XX/00	EJM

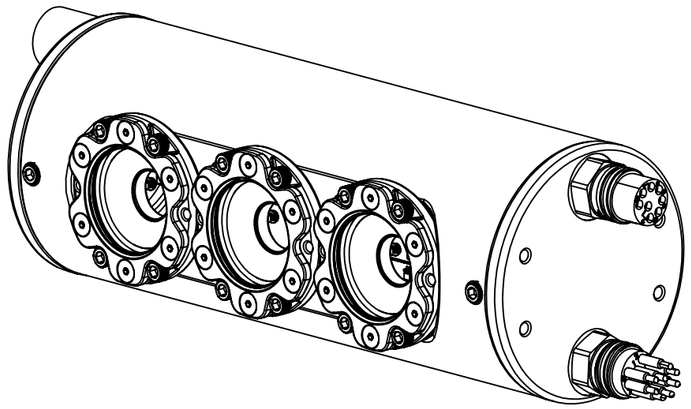

ITEM NO.	PART NUMBER	DESCRIPTION	QTY.
1	DD2088POE_OAK-FFC-4P--POE		1
2	56675T44	EASY-INSTALL CRIMP-ON DATA CONNECTOR	2
3	OAK HEATSINK MOCKUP	DESCRIPTION	1
4	GD-MB--0002--OAK 1500 HOUSING TUBE--REV-	OAK 1500 HOUSING TUBE	1
5	GD-MB--0006--OAK 1500 VIEWPORT HOUSING--REV-	OAK 1500 VIEWPORT HOUSING	3
6	GD-MB--0008--OAK 1500 WINDOW--REV-	OAK 1500 WINDOW	3
7	GD-MB--0007--OAK 1500 BEZEL--REV-	OAK 1500 BEZEL	3
8	ORING--2-028	DESCRIPTION	3
9	ORING--2-029	DESCRIPTION	3
10	ORING--2-127	DESCRIPTION	3
11	90585A211	316 STAINLESS STEEL HEX DRIVE FLAT HEAD SCREW	18
12	92185A192	SUPER-CORROSION-RESISTANT 316 STAINLESS STEEL SOCKET HEAD SCREW	12
13	92320A283	18-8 STAINLESS STEEL UNTHREADED SPACER	12
14	92000A013	PASSIVATED 18-8 STAINLESS STEEL PAN HEAD PHILLIPS SCREWS	12
15	92148A050	18-8 STAINLESS STEEL SPLIT LOCK WASHER	12
16	GD-MB--0003-0004--OAK 1500 ENDCAPS--REV-	OAK 1500 ENDCAPS	1
17	GD-MB--0003-0004--OAK 1500 ENDCAPS--REV-	OAK 1500 ENDCAPS	1
18	92185A191	SUPER-CORROSION-RESISTANT 316 STAINLESS STEEL SOCKET HEAD SCREW	6
19	93505A137	MALE-FEMALE THREADED HEX STANDOFF	2
20	92146A545	18-8 STAINLESS STEEL SPLIT LOCK WASHER	2
21	ORING--2-151	DESCRIPTION	2
22	93657A208	NYLON UNTHREADED SPACER	5
23	96367A101	HIGH-STRENGTH HIGH-TEMPERATURE PEEK SCREW	5
24	SUBCONN MCBH8M	DESCRIPTION	1
25	SUBCONN MCBH8F	DESCRIPTION	1
26	ZINC-G825	GALVION ZINC	1
27	PREVCO VENT PLUG-DUAL SEAL	PLUG, VENT	1
28	GD-MB--0009--OAK 1500 CHASSIS--REV-	OAK 1500 CHASSIS	1

ITEM NO.	QTY.	PART NO.	DESCRIPTION	VENDOR	MATERIAL SPECIFICATION

BILL OF MATERIALS

Shop / Q.C.

Inspector

Shop Foreman

Engineer

NEXT ASSY Description | NEXT ASSY Number

Application

UNLESS OTHERWISE SPECIFIED TOLERANCES ARE:

1 PLACE DIM 1/16	2 PLACE DIM .02	3 PLACE DIM .005	ANGLES 1

1. DIMENSIONS ARE IN INCHES
2. DIMENSION LIMITS HELD AFTER PLATING.
3. REMOVE BURRS AND SHARP EDGES .015 MAX.
4. MACHINED FILLET RADII .0150-.030.
5. MACHINED DIAMETERS ON A COMMON CENTERLINE CONCENTRIC WITHIN .OO5
6. PERPENDICULARITY & PARALLELISM OF MACHINED SURFACES .002 PER INCH. MAX .012 INCHES FOR SINGLE SURFACE.

DO NOT SCALE DRAWING

APPROVALS DATE

DRAWN E. MARTIN

ENGINEER E. MARTIN

CHECKED

PROJECT NO. XXX

PROJECT ZZZZZZZZ

WEIGHT lb.

Monterey Bay Aquarium Research Institute
MBARI
7700 Sandholdt RD.
Moss Landing, CA 95039
PH: (831) 775-1700

REV.

PROJECT NAME
DESCRIPTION

SIZE B | DWG. NO. .DWG

SCALE 1:2 | CAD FILE: MECH ENG ON TORNADO | SHEET 1 OF 1

NOTES: (CONT. FROM TITLE BLOCK)