THE INFORMATION CONTAINED IN THIS DRAWING IS THE SOLE PROPERTY OF MBARI ANY REPRODUCTION IN PART OR WHOLE WITHOUT THE WRITTEN PERMISSION OF MBARI IS PROHIBITED.

REVISIONS		
INITIAL RELEASE	0725/23	P.R.
Added filets on o-ring groove edges, removed extra st-dry port and sae4.	02/27/2025	P.R.

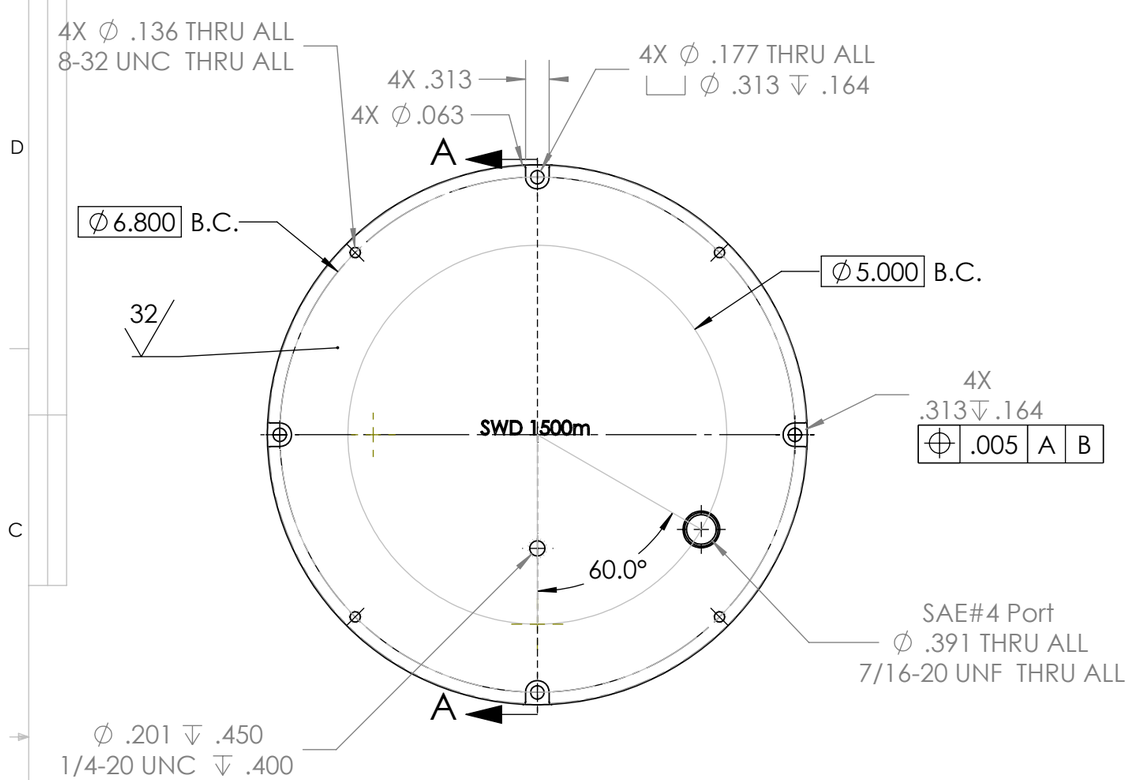

SECTION A-A

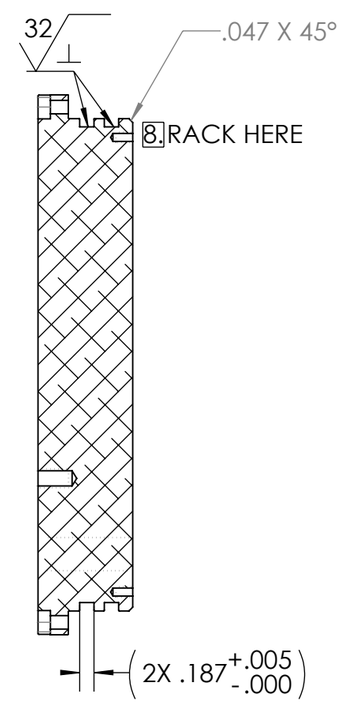

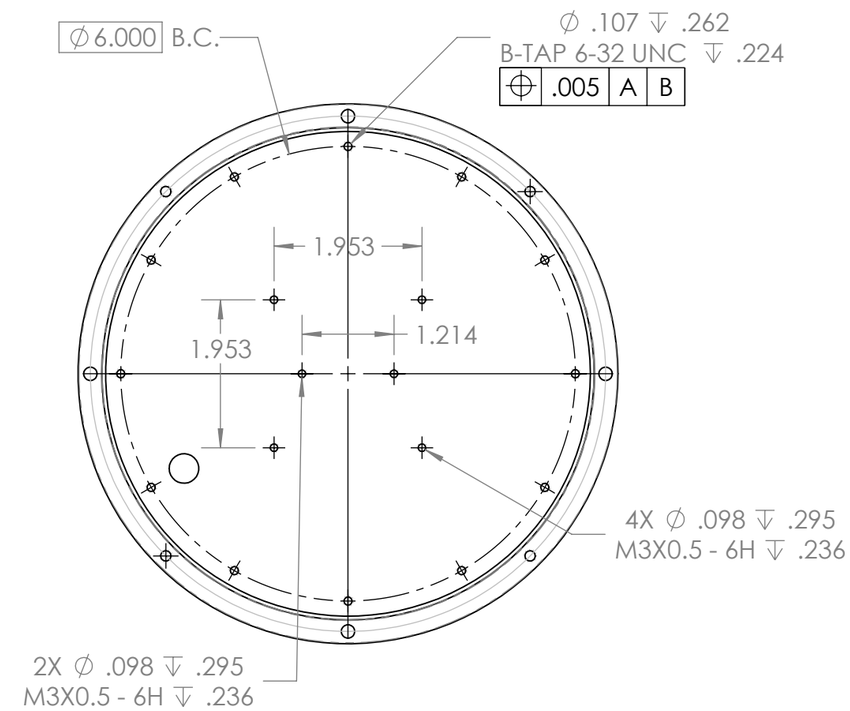

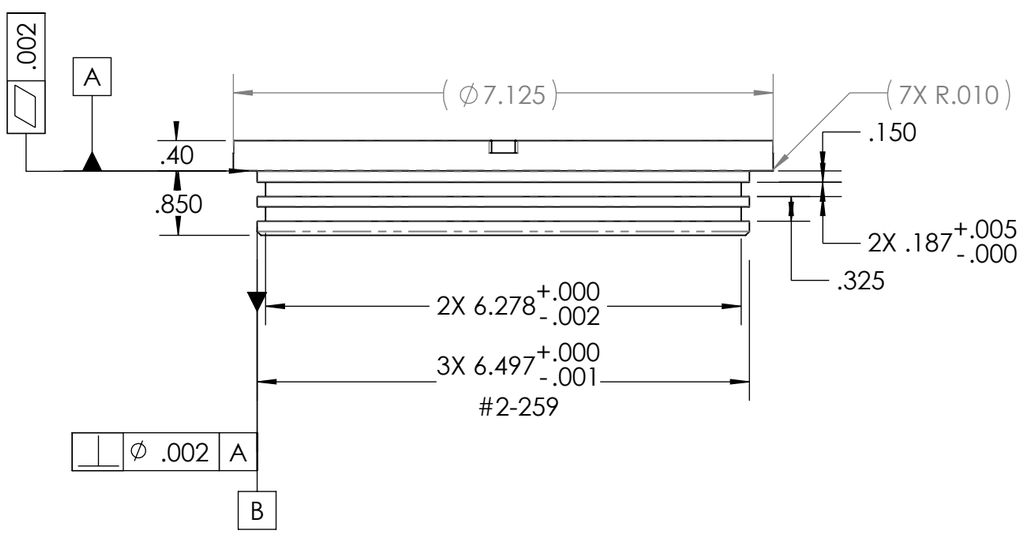

8. Finish: HARD CLEAR ANODIZE IN ACCORDANCE WITH MIL-A-8625F TYPE III, CLASS ! (.001 THICK) TEFLON SEAL COAT. RACK AS SHOWN.
7. PROJECT LIBRARY:X:\902204_CoMPAS\ME.Drawings\PoECan\P-100221950-02-MiniROV-PoE-Can-RearEndCap.SLDPRT

NOTES: (CONT. FROM TITLE BLOCK)

ITEM NO.	QTY.	Part_Number	DESCRIPTION	Vendor	MATERIAL
1	1	P-100221950-01	CoMPAS MiniROV-PoE-Can-RearEndCap	MBARI	6061-T6 (SS)

BILL OF MATERIALS

Shop / Q.C.	
Inspector	
Shop Foreman	
Engineer	
NEXT ASSY Description	NEXT ASSY Number
Application	

UNLESS OTHERWISE SPECIFIED TOLERANCES ARE:

1 PLACE DIM	2 PLACE DIM	3 PLACE DIM	ANGLES
±1/16	±.02	±.005	±1°

1. DIMENSIONS ARE IN INCHES
2. DIMENSION LIMITS HELD AFTER PLATING.
3. REMOVE BURRS AND SHARP EDGES .015 MAX.
4. MACHINED FILLET RADII .0150-.030.
5. MACHINED DIAMETERS ON A COMMON CENTERLINE CONCENTRIC WITHIN .005
6. PERPENDICULARITY & PARALLELISM OF MACHINED SURFACES .002 PER INCH, MAX .012 INCHES FOR SINGLE SURFACE.

DO NOT SCALE DRAWING

APPROVALS	DATE
DRAWN P. ROBERTS	
ENGINEER P. ROBERTS	
CHECKED	
PROJECT NO. 902204	
PROJECT CoMPAS	
WEIGHT 4.190	

Monterey Bay Aquarium Research Institute
MBARI
7700 Sandholdt RD.
Moss Landing, CA 95039
PH: (831) 775-1700

CoMPAS MiniROV Interface
PoE-Can-RearEndCap

SIZE	DWG. NO.	REV.
B	P-100221950-01.DWG	B

SCALE 1:2 | CAD FILE: MECH ENG ON TORNADO | SHEET 1 OF 1