THE INFORMATION CONTAINED IN THIS DRAWING IS THE SOLE PROPERTY OF MBARI ANY REPRODUCTION IN PART OR WHOLE WITHOUT THE WRITTEN PERMISSION OF MBARI IS PROHIBITED.

REVISIONS			
REV.	DESCRIPTION	DATE	APPROVED
	INITIAL RELEASE		

ITEM NO.	PART NUMBER	DESCRIPTION	QTY.
1	100222317_SpelterSocket_GeoSense	Spelter SocketGeo-Sense(Frame end)	1
2	RetainingRingPlup	Plug retaining ring	1
3	98870A240	Machine Key	1
4	92185A987	Super-Corrosion-Resistant 316 Stainless Steel Socket Head Screw	5
5	9452K205	Oil-Resistant Buna-N O-Ring	1

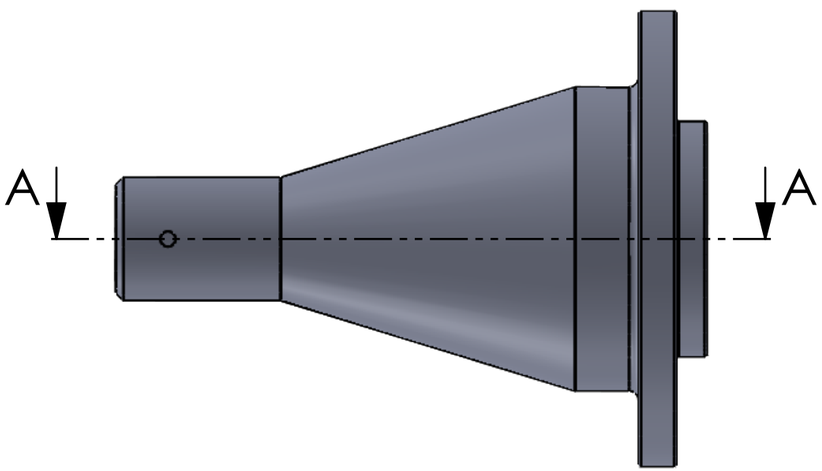

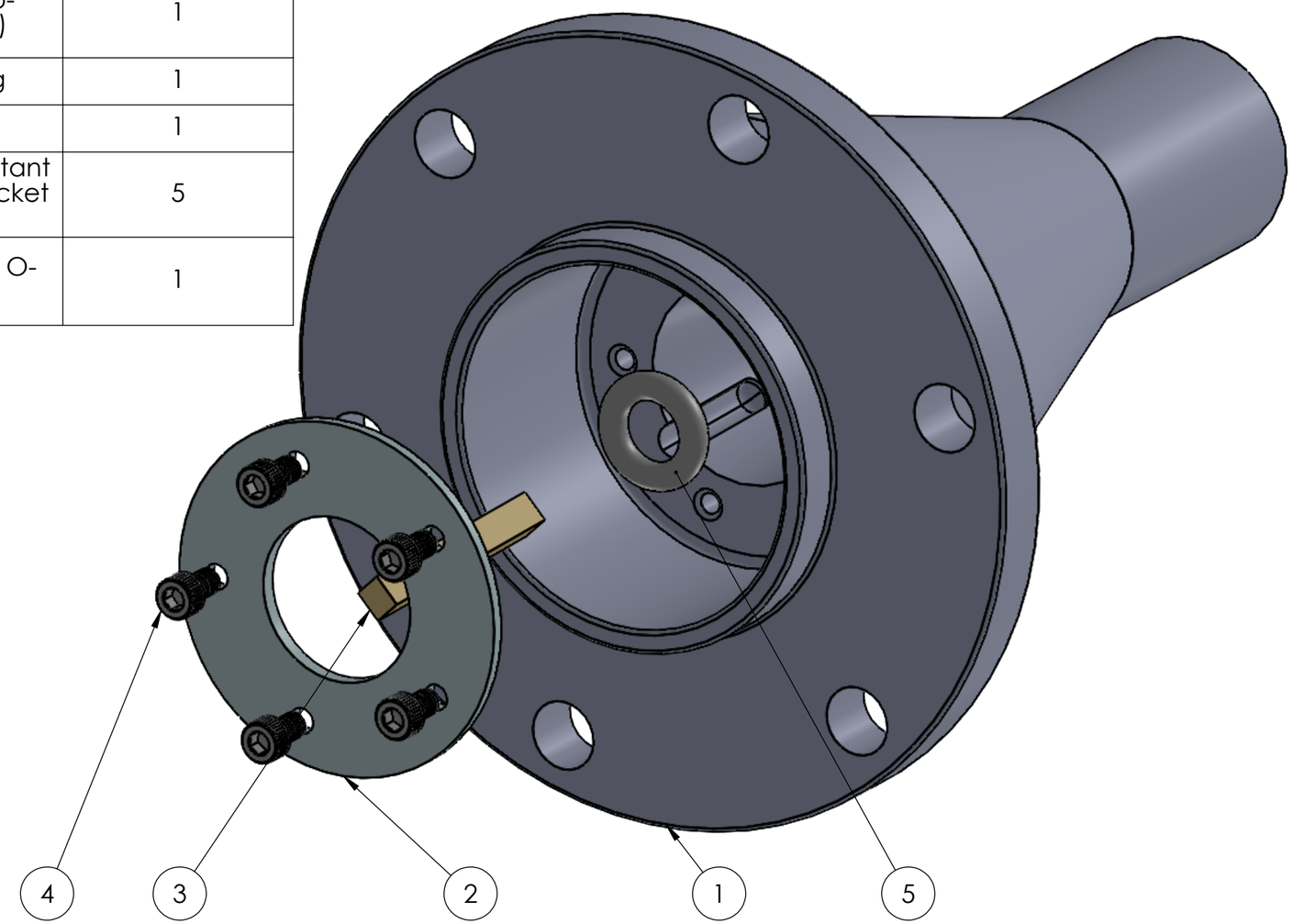

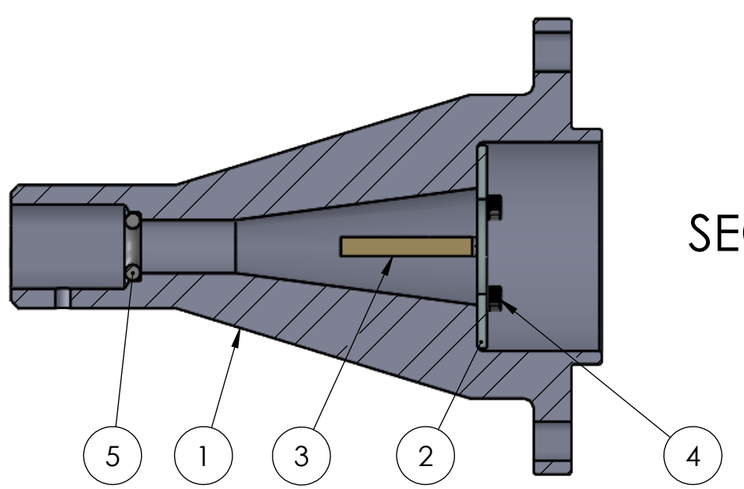

SECTION A-A

SCALE 1 : 2

BILL OF MATERIALS

Shop / Q.C.		UNLESS OTHERWISE SPECIFIED TOLERANCES ARE:				APPROVALS	DATE
Inspector		1 PLACE DIM ±1/16	2 PLACE DIM ±.02	3 PLACE DIM ±.005	ANGLES ±1°	DRAWN Aaron Schnittger	8/27/23
Shop Foreman		1. DIMENSIONS ARE IN INCHES				ENGINEER Aaron Schnittger	8/27/23
Engineer		2. DIMENSION LIMITS HELD AFTER PLATING.				CHECKED	
		3. REMOVE BURRS AND SHARP EDGES .015 MAX.					
		4. MACHINED FILLET RADII .0150-.030.				PROJECT NO. 902401	
NEXT ASSY Description	NEXT ASSY Number	5. MACHINED DIAMETERS ON A COMMON CENTERLINE CONCENTRIC WITHIN .005				PROJECT GeoSense	
		6. PERPENDICULARITY & PARALLELISM OF MACHINED SURFACES .002 PER INCH. MAX .012 INCHES FOR SINGLE SURFACE.					
Application		DO NOT SCALE DRAWING				WEIGHT	

Monterey Bay Aquarium Research Institute
MBARI
7700 Sandholdt RD.
Moss Landing, CA 95039
PH: (831) 775-1700

SocketW_plug_retainer

SIZE	DWG. NO.	REV.
B	A-100222323DWG	

SCALE 1:5 | CAD FILE: MECH ENG ON TORNADO | SHEET 1 OF 1