THE INFORMATION CONTAINED IN THIS DRAWING IS THE SOLE PROPERTY OF MBARI ANY REPRODUCTION IN PART OR WHOLE WITHOUT THE WRITTEN PERMISSION OF MBARI IS PROHIBITED.

REVISIONS			
REV.	DESCRIPTION	DATE	APPROVED
A	INITIAL RELEASE	08/11/15	MRC
B	MODIFIED TO MATCH BATTERY ACTUAL	08/13/15	MRC

ITEM NO.	PART NUMBER	DESCRIPTION	QTY.
1	BenthosGlassHemisphere_Bottom	2040-17H; GLASS INSTRUMENT HOUSING-17", with 204-VPT, Titanium Vacuum port, Installed	1
2	BenthosGlassHemisphere_Top	2040-17H; GLASS INSTRUMENT HOUSING-17", with 204-DHO; HOLE DRILLING TO 1/2" WIDTH GROUND FLAT	1
3	ElectroChemBatPack_3PD1489	Electrochem 28 cell 4S7P battery pack PN 3PD1489	4
4	SeaconPenetrator_FAWM-8-PENT-RA	MBARI PN 10021142-01-B cable with penetrator FAWM-8-PENT-RA	1
5	11021186-01-A_BatteryMountBaseFrame	MBARI custom machined part	1
6	11021186-02-A_BatteryMountBasePlate	MBARI custom FRP water jet part	1
7	96246A208	McMaster Helicoil insert with 1/4" - 20 internal thread	4
8	11021186-03-A_BatteryMountMidPlate	MBARI custom FRP water jet part	1
9	11021186-04-B_BatteryMountUpperFrame	MBARI custom sheet metal part	1
10	11021186-06-B_BatteryFRPInsulator	MBARI custom FRP water jet part	1
11	90107A029	McMaster # 1/4 flat washer	4
12	90715A125	McMaster #1/4-20 nylok nut	4
13	11021186-07-A_BatteryPCB	MBARI custom printed circuit board	1
14	93090A240	McMaster #6-32x0.375 Clinch Standoff	6
15	11021186-08-A_BatteryGaugeMount	MBARI custom sheet metal part	1
16	3935K21_VacuumGauge	McMaster part	1
17	4429K121	McMaster 1/8" NPT lock nut	1
18	8749K62_x3.750	McMaster part 8749K62 or equivalent cut to 3.750 inches	8
19	93250A058_0.25-20x8.75ThreadedRod	McMaster part 93250A058 or equivalent cut to 8.75 inches	4
20	11021186-05-B_Battery0.250RubberPad	MBARI custom neoprene part	2
21	11021186-09-A_Battery0.125RubberPad	MBARI custom neoprene part	2

NOTES:
1. PROTECT GLASS SPHERE EDGES WITH TUBING DURING ASSEMBLY.
2. BASE FRAME IS BONDED INTO THE GLASS SPHERE USING 3M 5200 FAST CURE ADHESIVE. USE JIG DURING ASSEMBLY TO ENSURE CORRECT POSITIONING. CLEARANCES ARE VERY TIGHT SO CORRECT POSITIONING IS ESSENTIAL.
3. ASSEMBLE BATTERY STACK IN SEQUENCE USING CARE TO NOT APPLY MORE CLAMP FORCE THEN NECESSARY TO HOLD BATTERIES IN POSITION. USE ADDITIONAL NEOPRENE PADS AS FILLER IF NECESSARY.
4. CINCH HEAVY DUTY TIE-WRAP AROUND EACH BATTERY LAYER TO HOLD TOGETHER (NOT SHOWN).
5. SEAL AND VACUUM COMPLETED ASSEMBLY TO -10 INCHES OF Hg (~-5PSI)+ CONFIRM HOLDS VACUUM.

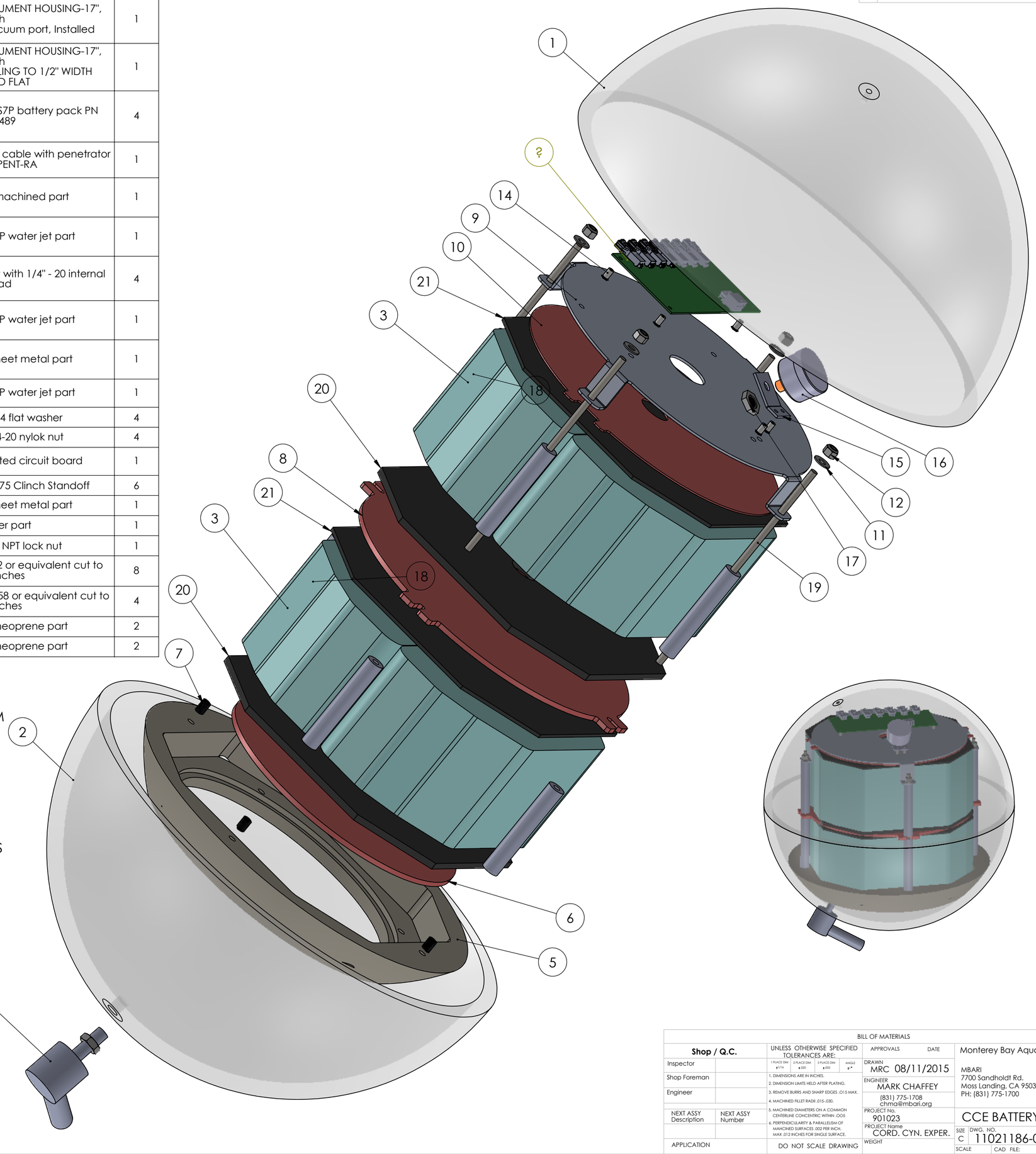

BILL OF MATERIALS

Shop / Q.C.		UNLESS OTHERWISE SPECIFIED TOLERANCES ARE:	APPROVALS	DATE	Monterey Bay Aquarium Research Institute
Inspector		1 PLACE DIM ±1/16 · 2 PLACE DIM ±.030 · 3 PLACE DIM ±.005 · ANGLE ±1°	DRAWN MRC	08/11/2015	MBARI 7700 Sandholdt Rd. Moss Landing, CA 95039 PH: (831) 775-1700
Shop Foreman		1. DIMENSIONS ARE IN INCHES. 2. DIMENSION LIMITS HELD AFTER PLATING.	ENGINEER MARK CHAFFEY		
Engineer		3. REMOVE BURRS AND SHARP EDGES .015 MAX. 4. MACHINED FILLET RADII .015-.030.	(831) 775-1708 chma@mbari.org		
NEXT ASSY Description	NEXT ASSY Number	5. MACHINED DIAMETERS ON A COMMON CENTERLINE CONCENTRIC WITHIN .005	PROJECT No. 901023		CCE BATTERY ASSEMBLY
		6. PERPENDICULARITY & PARALLELISM OF MAHCINED SURFACES .002 PER INCH. MAX .012 INCHES FOR SINGLE SURFACE.	PROJECT Name CORD. CYN. EXPER.		SIZE C · DWG. NO. 11021186-00-B-DWG · REV. B
APPLICATION		DO NOT SCALE DRAWING	WEIGHT		SCALE · CAD FILE: · SHEET 1 OF 1