THE INFORMATION CONTAINED IN THIS DRAWING IS THE SOLE PROPERTY OF MBARI ANY REPRODUCTION IN PART OR WHOLE WITHOUT THE WRITTEN PERMISSION OF MBARI IS PROHIBITED.

ITEM NO.	QTY.	DESCRIPTION	LENGTH
1	2	TUBE, SQUARE 2.00 X 2.00 X 0.13	21.88
2	2	TUBE, SQUARE 2.00 X 2.00 X 0.13	26
3	1	Mild Steel Plate 8.5 X 8.5 X 0.5	
4	2	TUBE, SQUARE 2.00 X 2.00 X 0.13	27.16

REVISIONS			
REV.	DESCRIPTION	DATE	APPROVED
	INITIAL RELEASE		

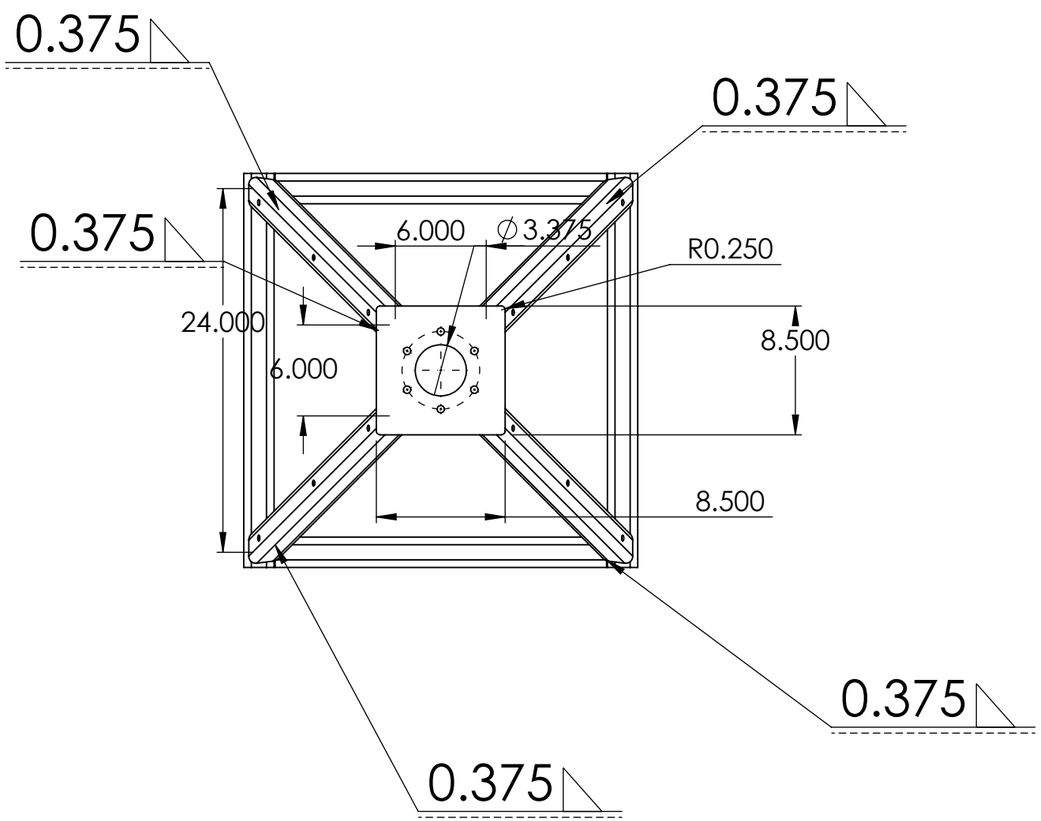

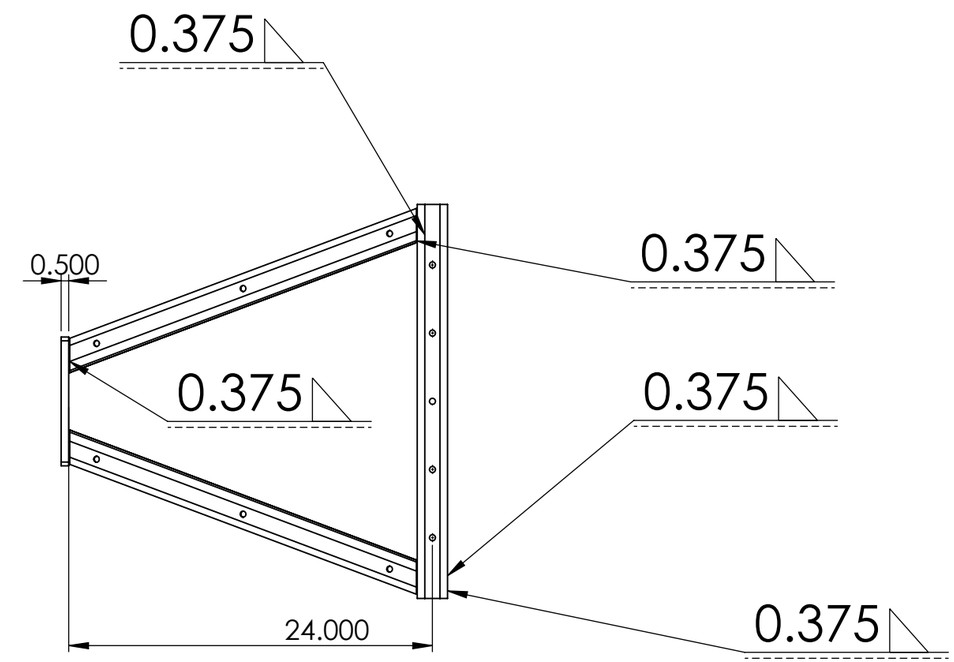

BILL OF MATERIALS

Shop / Q.C.		UNLESS OTHERWISE SPECIFIED TOLERANCES ARE:				APPROVALS	DATE
Inspector		1 PLACE DIM ±1/16	2 PLACE DIM ±.02	3 PLACE DIM ±.005	ANGLES ±1°	DRAWN Aaron Schnittger	8/27/23
Shop Foreman		1. DIMENSIONS ARE IN INCHES				ENGINEER Aaron Schnittger	9/27/23
Engineer		2. DIMENSION LIMITS HELD AFTER PLATING.				CHECKED	
		3. REMOVE BURRS AND SHARP EDGES .015 MAX.					
		4. MACHINED FILLET RADII .0150-.030.				PROJECT NO. XXX	
NEXT ASSY Description	NEXT ASSY Number	5. MACHINED DIAMETERS ON A COMMON CENTERLINE CONCENTRIC WITHIN .OO5				PROJECT ZZZZZZZZ	
		6. PERPENDICULARITY & PARALLELISM OF MACHINED SURFACES .002 PER INCH. MAX .012 INCHES FOR SINGLE SURFACE.					
Application		DO NOT SCALE DRAWING				WEIGHT	

Monterey Bay Aquarium Research Institute
MBARI
7700 Sandholdt RD.
Moss Landing, CA 95039
PH: (831) 775-1700

TopEnd_Weldment

SIZE	DWG. NO.	REV.
B	100XXXDWG	

SCALE 1:10 | CAD FILE: MECH ENG ON TORNADO | SHEET 1 OF 1