THE INFORMATION CONTAINED IN THIS DRAWING IS THE SOLE PROPERTY OF MBARI. ANY REPRODUCTION IN PART OR WHOLE WITHOUT THE WRITTEN PERMISSION OF MBARI IS PROHIBITED.

REV	DESCRIPTION	DATE	APPROVED
A	INITIAL RELEASE	8/23/06	JS
B	ADDED CONCENTRIC Ø .0625 (SCHEME B)	9/12/06	JS
C	CHG TAP F4-32 TO F8-40 (SCHE A2)	9/12/06	JS

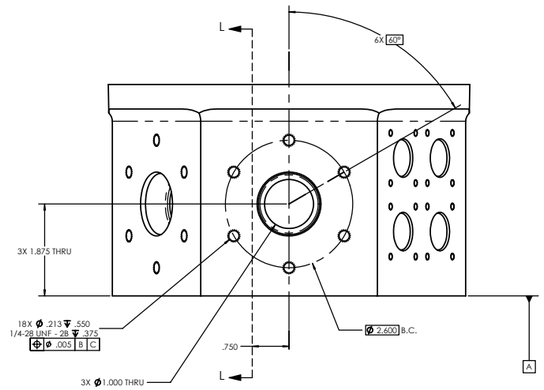

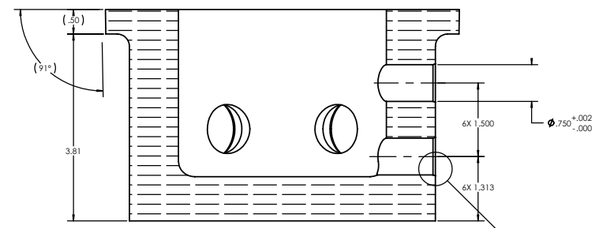

SECTION L-L

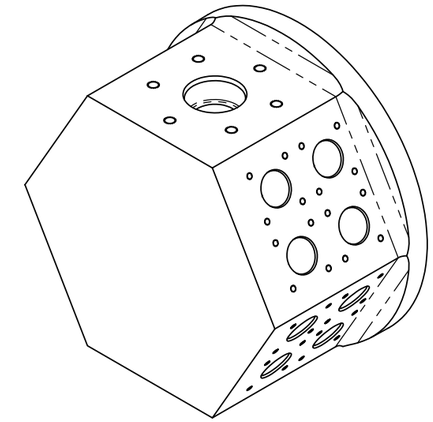

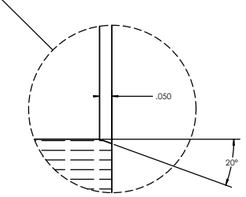

DETAIL D
SCALE 5 : 1

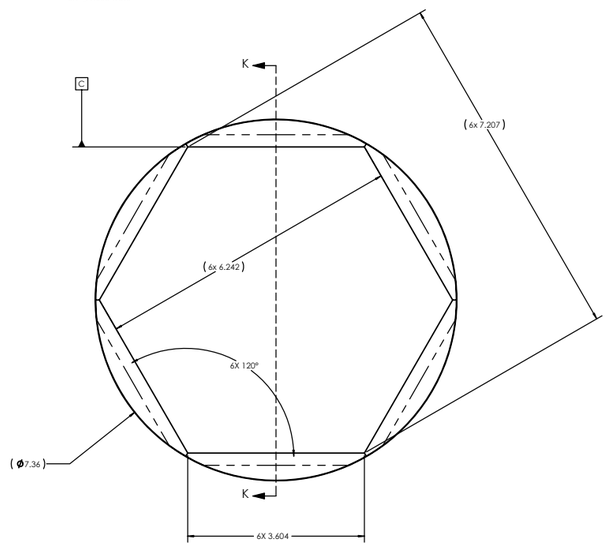

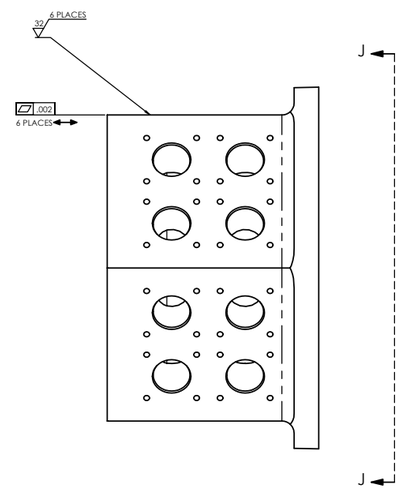

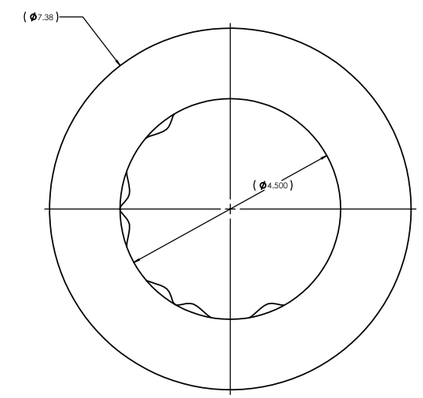

VIEW J

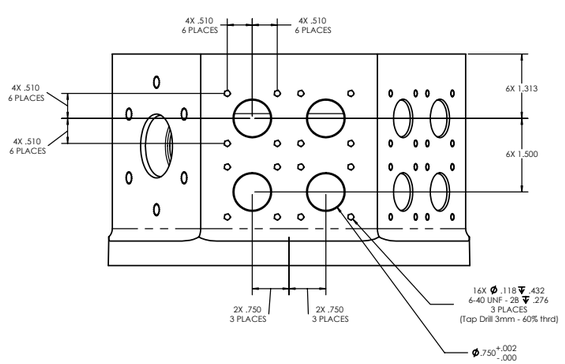

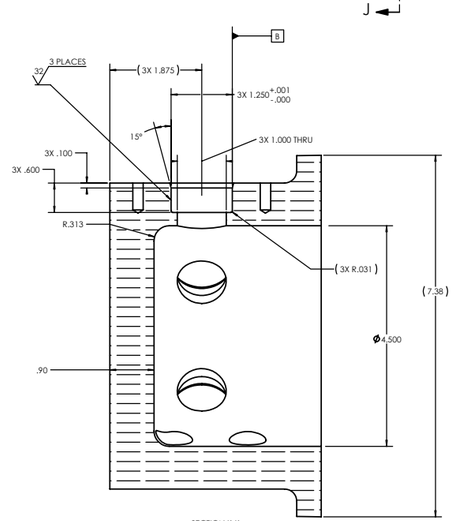

SECTION K-K

NOTES: (CONT. FROM TITLE BLOCK)

REV	SHT	PART NO.	DESCRIPTION	VENDOR	MATERIAL SPECIFICATION

SHOP / QC	UNLESS OTHERWISE SPECIFIED TOLERANCES ARE:	APPROVALS	DATE	Monterey Bay Aquarium Research Institute
MANUFACTURE		DRAWN	J BRICKSON 2/22/05	7700 Sandholdt Rd. Moss Landing, CA 95039
QUALITY CONTROL		CHECKED	J BRICKSON 2/22/05	PH: (831) 775-1768
ENGINEER		ENGINEER		
NEXT ASSY DESCRIPTION	NEXT ASSY NUMBER	DRAWING NO	4900207	BSN/BSN DECONN HEX HAT - MACHINING DCon.End.Cap_Cast END CAP
		PROJECT	MOOS	
APPLICATION	DO NOT SCALE DRAWING	GROUP		SIZE B — 1002686.DWG-02 — REV A — SHEET 1 OF 1