THE INFORMATION CONTAINED IN THIS DRAWING IS THE SOLE PROPERTY OF MBARI AND REPRODUCTION IN PART OR WHOLE WITHOUT THE WRITTEN PERMISSION OF MBARI IS PROHIBITED.

REV	DESCRIPTION	DATE	APPROVED
A	INITIAL RELEASE	03/05/08	JS
B	ADDED CHAMFER ON ⌀.750 (HOME EA)	04/08/08	JS
C	CHG 1/4" FA-32 UNC 8X-40 (2) VIA TO	05/08/08	JS
D	CHG HOLE CNTRS TO BE ORIGINAL EA BS	05/08/08	JS

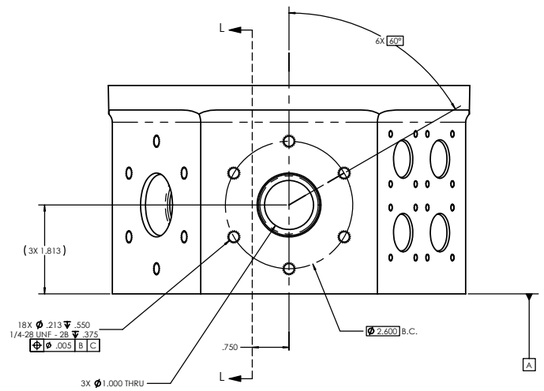

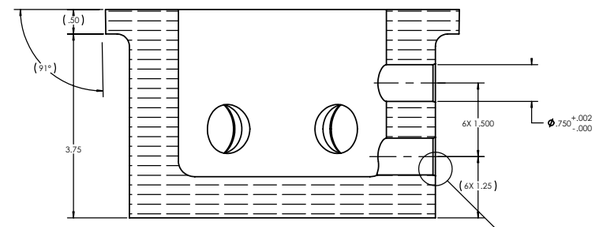

SECTION L-L

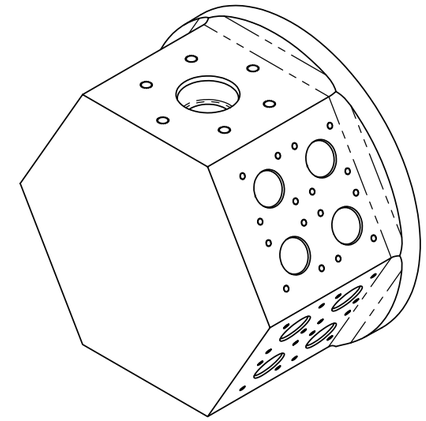

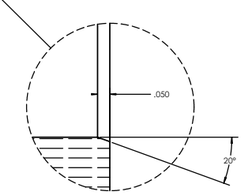

DETAIL D
SCALE 5 : 1

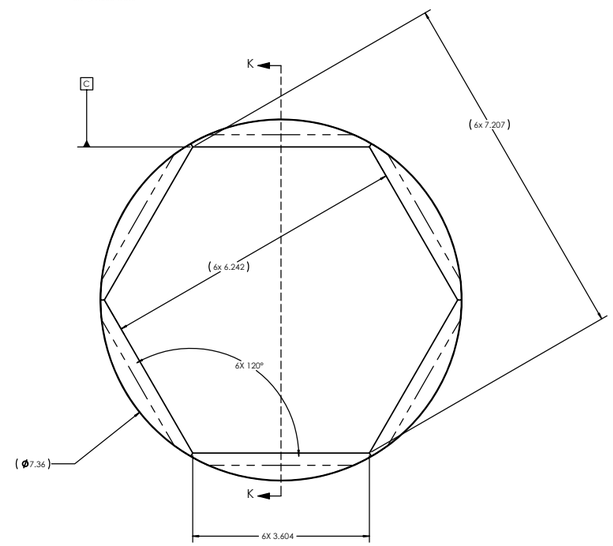

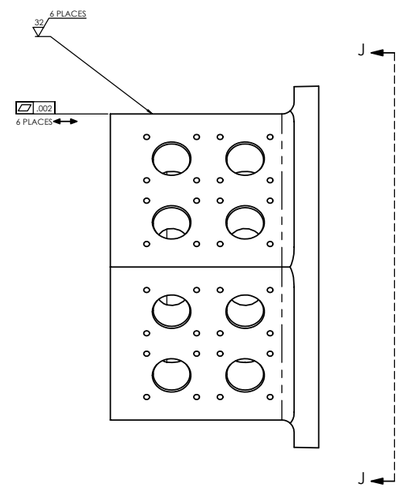

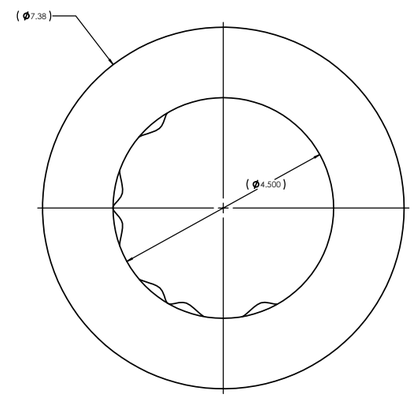

VIEW J

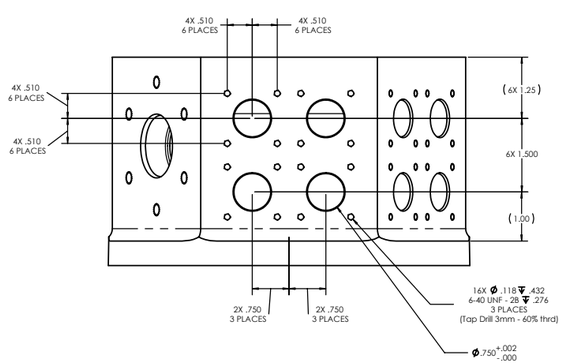

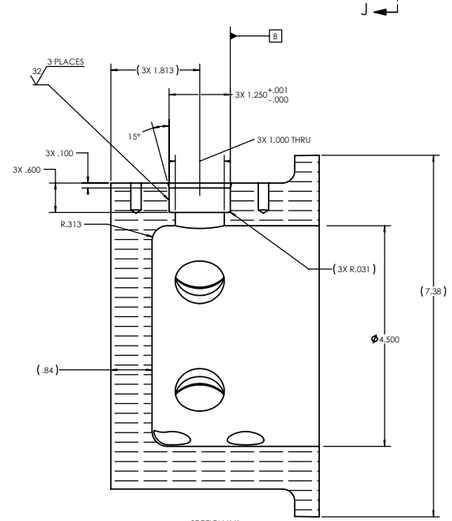

SECTION K-K

NOTES: (CONT. FROM TITLE BLOCK)

REV	DIST	PART NO.	DESCRIPTION	VENDOR	MATERIAL SPECIFICATION

BILL OF MATERIALS

SHOP / G.C.	UNLESS OTHERWISE SPECIFIED TOLERANCES ARE:	APPROVALS	DATE
DRAWN BY		DRAWN	J. ERICKSON 3/25/08
CHECKED BY		CHECKED	J. ERICKSON 3/25/08
EXCEPTIONS		ENGINEERING	
REVIEWER		MANUFACTURING	
NEXT ASSY DESCRIPTION	NEXT ASSY NUMBER	QUALITY ASSURANCE	49507
APPLICATION	DO NOT SCALE DRAWING	PROJECT	MCOS
		GROUP	

Monterey Bay Aquarium Research Institute
MBARI
7700 Sandholdt Rd.
Moss Landing, CA 95039
PH: (831) 775-1768

8IN/8IN DECONN HEX HAT - MACHINING
DCon.End.Cap_Cast END CAP

SIZE	DWG NO	REV
D	1002686.DWG-02	C

SCALE: 1:1 SHEET 1 OF 1