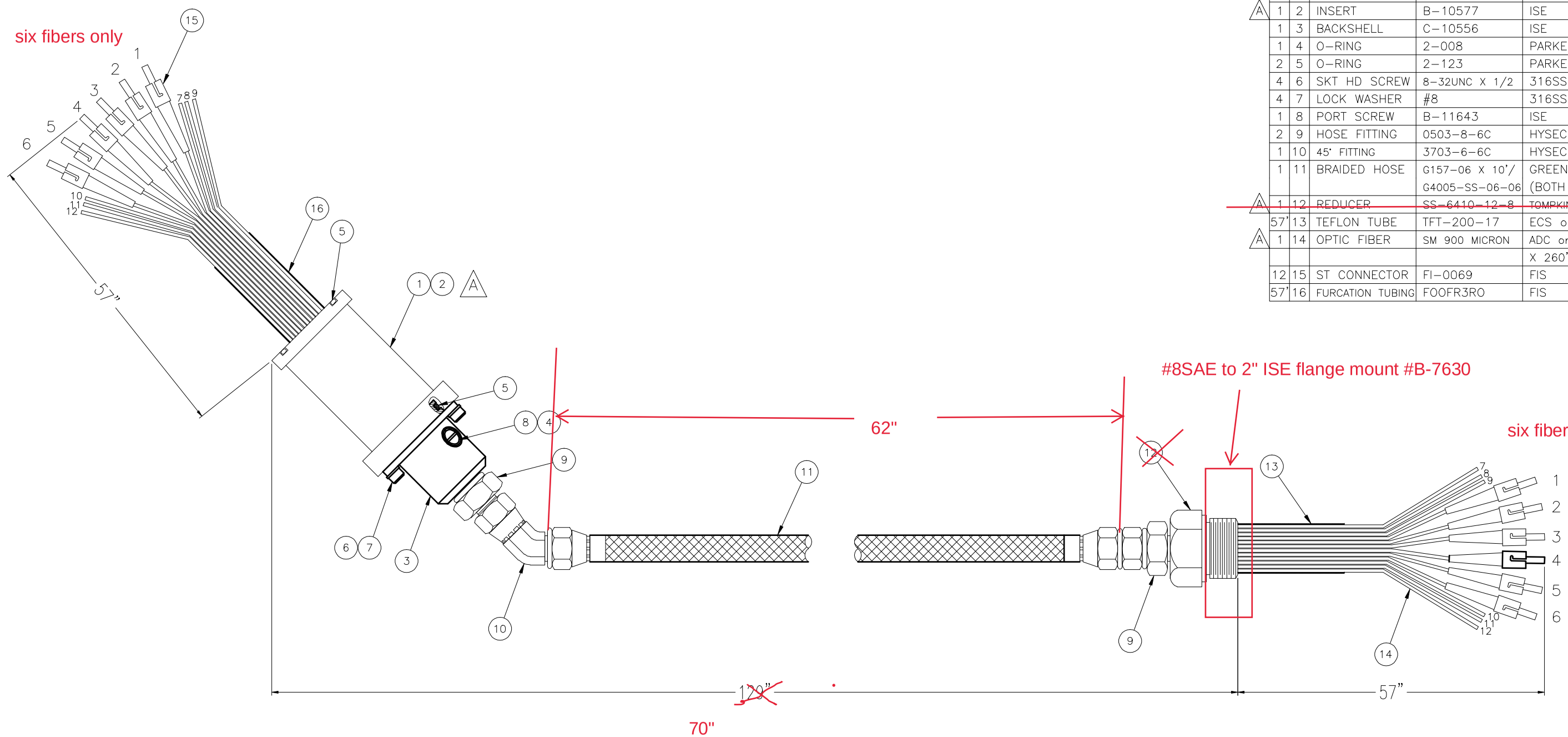

MATERIALS/COMPONENTS FOR ONE UNIT

	QTY	REF	DESCRIPTION	PART NUMBER	MANUFACTURER
	1	1	PEN. SHELL	C–10557	ISE
A	1	2	INSERT	B–10577	ISE
	1	3	BACKSHELL	C–10556	ISE
	1	4	O–RING	2–008	PARKER
	2	5	O–RING	2–123	PARKER
	4	6	SKT HD SCREW	8–32UNC X 1/2	316SS
	4	7	LOCK WASHER	#8	316SS
	1	8	PORT SCREW	B–11643	ISE
	2	9	HOSE FITTING	0503–8–6C	HYSECO
	1	10	45° FITTING	3703–6–6C	HYSECO
	1	11	BRAIDED HOSE	G157–06 X 10'/ G4005–SS–06–06	GREENLINE (BOTH ENDS)
~~A~~	~~1~~	~~12~~	~~REDUCER~~	~~SS–6410–12–8~~	~~TOMPKINS or EQUAL~~
	57'	13	TEFLON TUBE	TFT–200–17	ECS or EQUAL
A	1	14	OPTIC FIBER	SM 900 MICRON	ADC or EQUAL
					X 260' LG.
	12	15	ST CONNECTOR	FI–0069	FIS
	57'	16	FURCATION TUBING	FOOFR3RO	FIS

REV	APR	DATE (Y/M/D)	REVISION
A	DM	08/12/01	DCN 4414

NOTICE:

THIS DRAWING MAY REVEAL DESIGNS OR INFORMATION PROPRIETARY TO I.S.E. BY ACCEPTANCE OF A REPRODUCTION RECIPIENTS AGREE TO PROTECT I.S.E'S RIGHTS AND ARE WARNED AGAINST USE OF THE DOCUMENT FOR ANY PURPOSE OTHER THAN THAT FOR WHICH IT WAS TENDERED

		Y/M/D
DSN	PL	02/05/10
DRN	JO	02/05/16
CHK	RG	02/05/21
APV	PL	02/05/21

I.S.E.
INTERNATIONAL SUBMARINE ENGINEERING LTD.
1734 BROADWAY STREET, PORT COQUITLAM, BC, CANADA, V3C 2M8

PROJECT: OCEANEERING PROJECT #:

TITLE: FIBRE–OPTIC CABLE ASSEMBLY

NEXT ASSY DWG.

SCALE NTS

DWG.No/PART No. B– 17732 SHEET 1 of 1 REV – A