=CTD DAVIT

Customer : CNP Freire
Ship/Hull : MBARI
Project no. : 4/60185
Drawing no.: E-4503

05	For customer review	24.02.2023	GM	Date	14.10.2021
04	For customer review	17.02.2023	GM	Drawn by	KS
03	For customer review	14.02.2023	GM	Appr. by	BK
Rev.	Description	Date	Rev. by	Standard	

4/60185
CNP Freire
MBARI

TRIPLEX
A MacGregor company

Front Page
CTD Davit

=CTD DAVIT

E-4503 - 00

Rev. 05

1 / 1

Printed: 24.02.2023 15:27

Template:

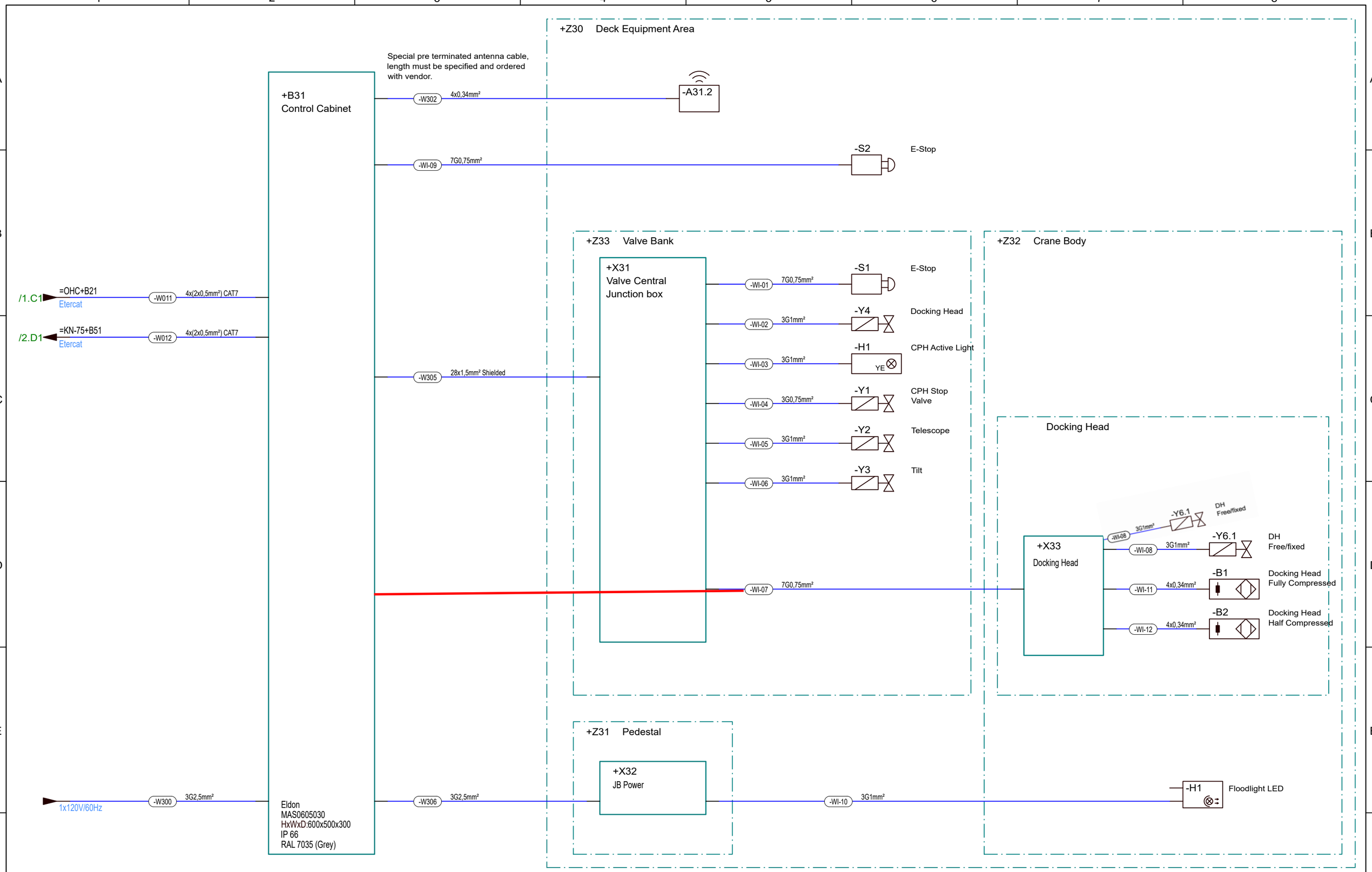

Rev.	Description	Date	Rev. by		
05	For customer review	24.02.2023	GM	Date	14.10.2021
04	For customer review	17.02.2023	GM	Drawn by	KS
03	For customer review	14.02.2023	GM	Appr. by	BK
				Standard	

4/60185
CNP Freire
MBARI

TRIPLEX
A MacGregor company

Single Line
CTD Davit

=CTD DAVIT

E-4503 - 01

Rev. 05

1 / 1

Printed: 24.02.2023 15:27

Template:

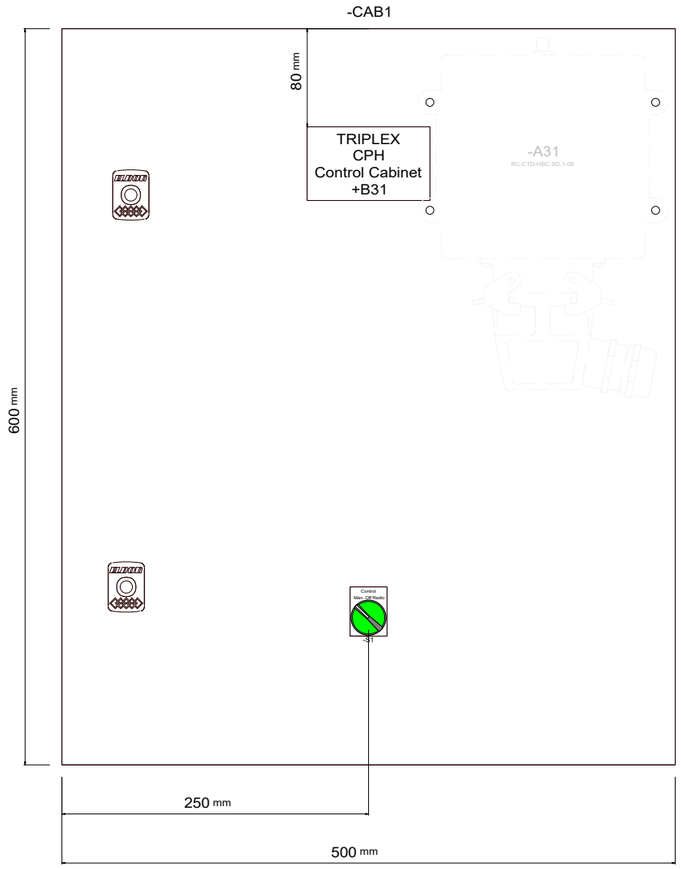

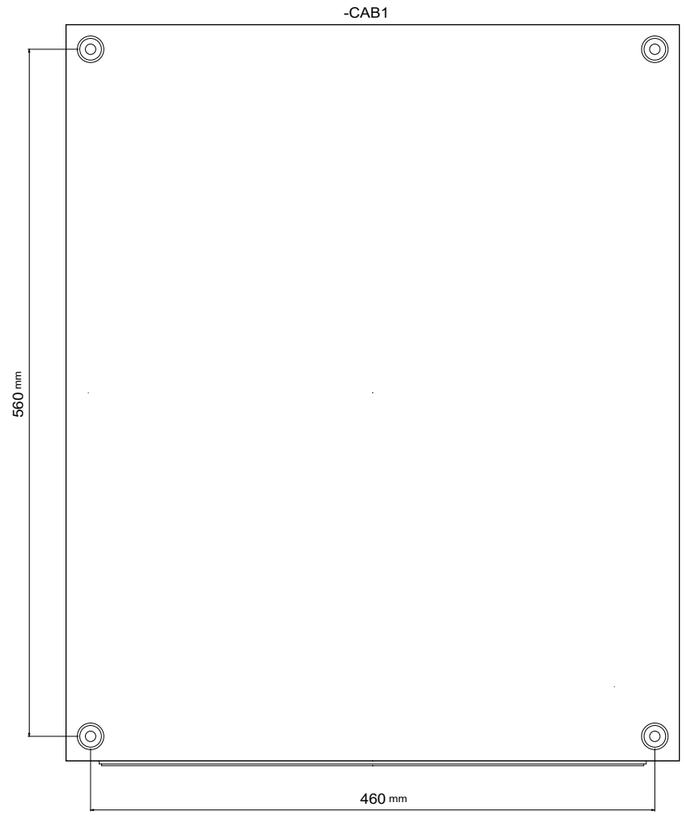

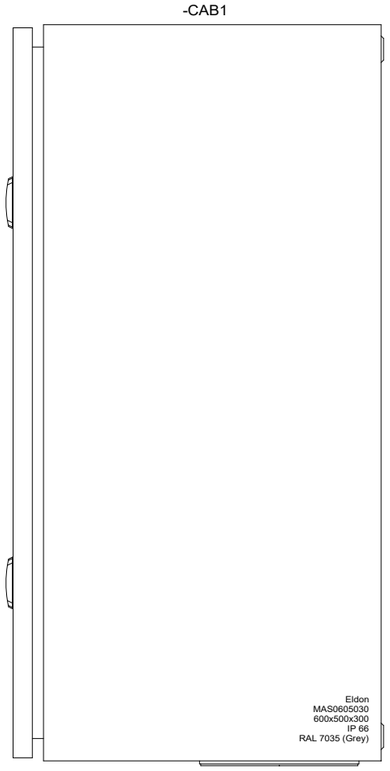

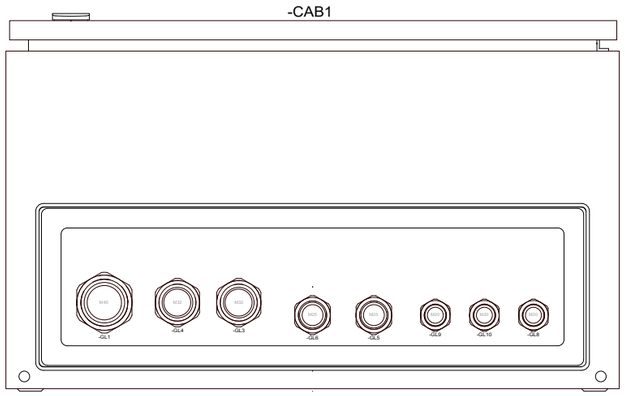

Product Data	
Manufacturer	Eldon
Article name	MAS0605030
WxHxD	600x500x300
IP	IP 66
RAL Code	RAL 7035 (Grey)
Material	Steel, Painted

Rev.	Description	Date	Rev. by	Standard	
05	For customer review	24.02.2023	GM	Date	14.10.2021
04	For customer review	17.02.2023	GM	Drawn by	KS
03	For customer review	14.02.2023	GM	Appr. by	BK

4/60185
CNP Freire
MBARI

TRIPLEX
A MacGregor company

Layout
CTD Davit
Control Cabinet Radio - Outside

=CTD DAVIT
+B31

E-4503 - 03
Rev. 05
1 / 8

Printed: 24.02.2023 15:27

Template:

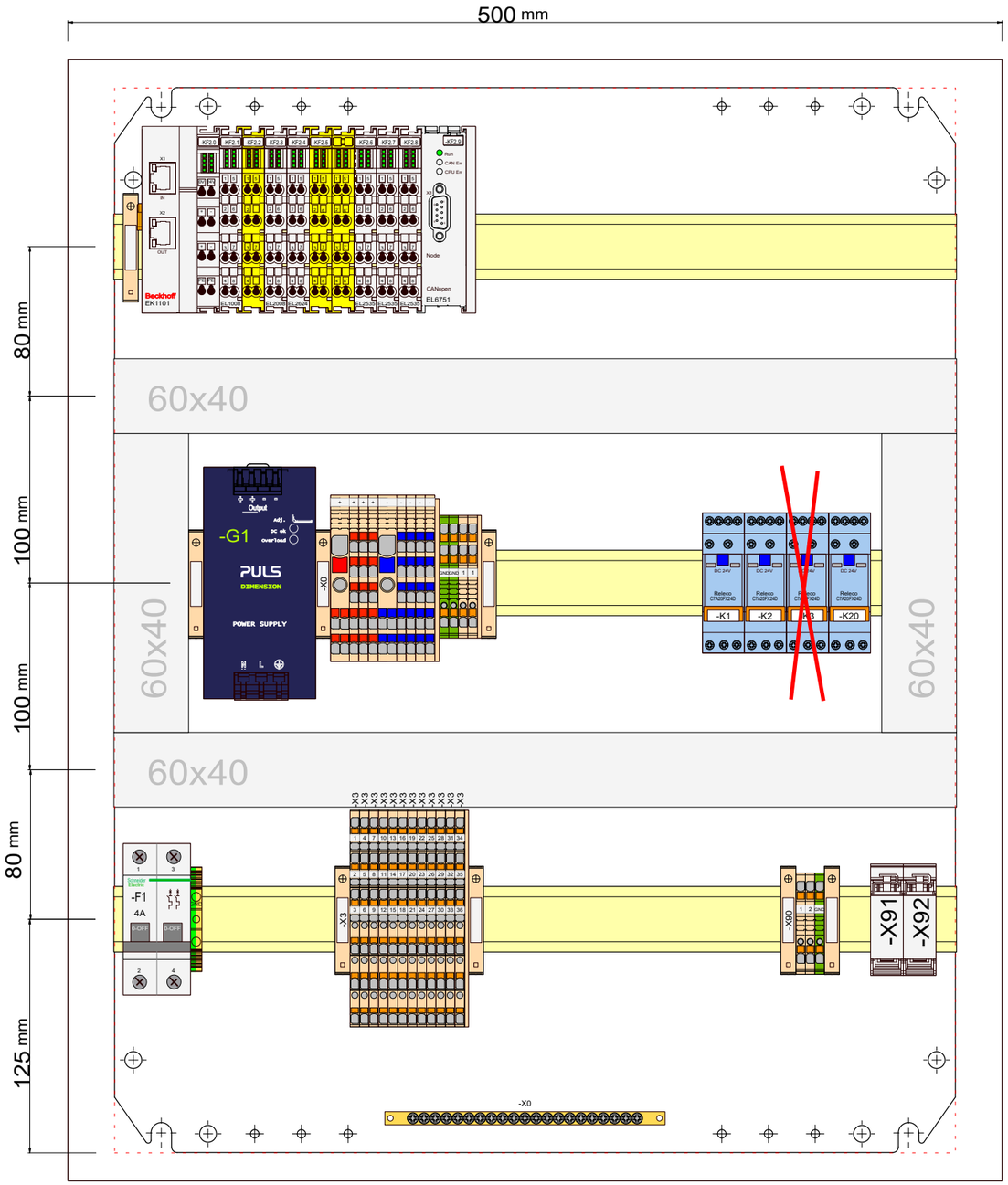

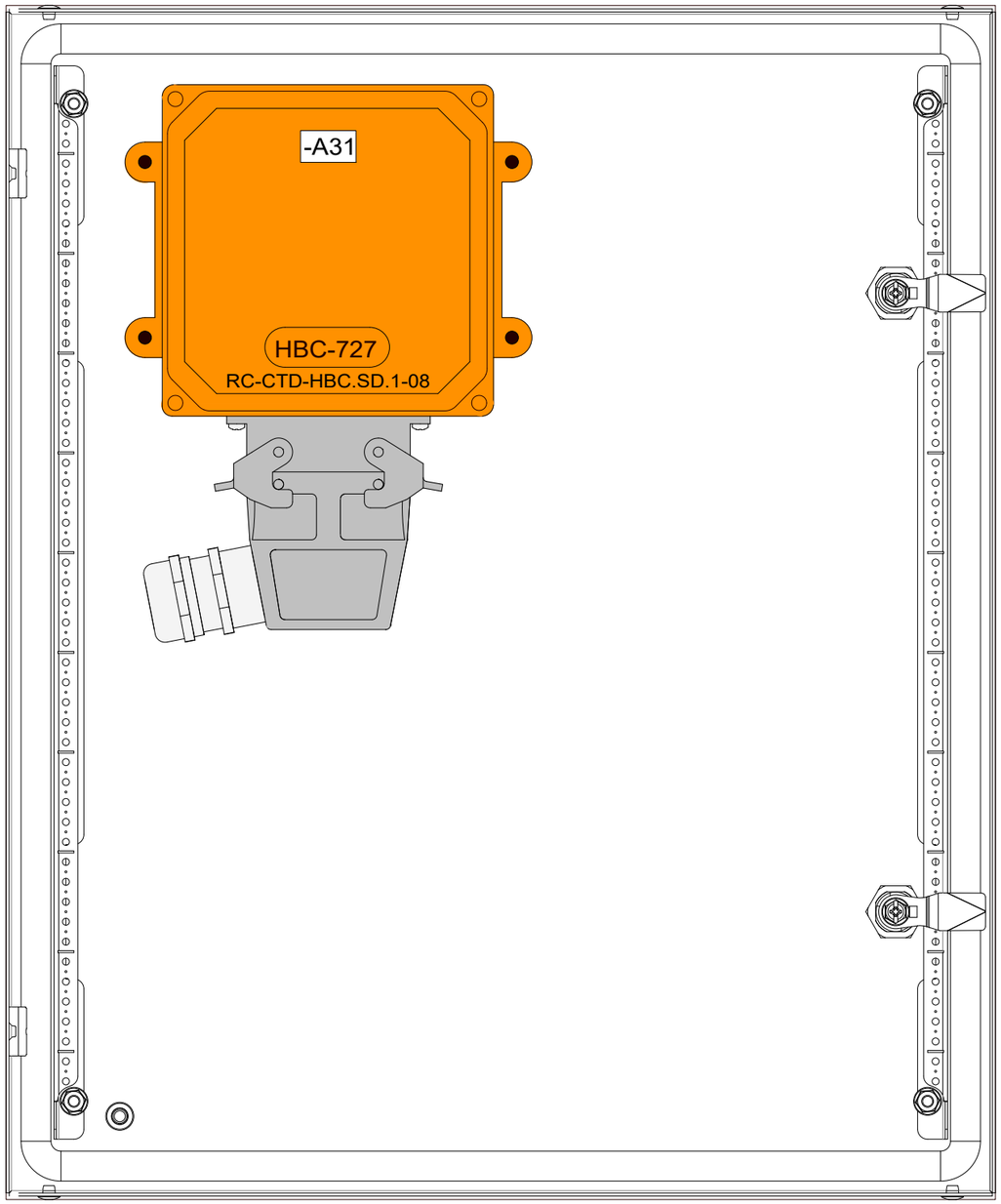

05	For customer review	24.02.2023	GM	Date	14.10.2021	4/60185 CNP Freire MBARI	TRIPLEX A MacGregor company	Layout CTD Davit Control Cabinet Radio - Inside	=CTD DAVIT	E-4503 - 03
04	For customer review	17.02.2023	GM	Drawn by	KS				+B31	Rev. 05 / 2 / 8
03	For customer review	14.02.2023	GM	Appr. by	BK					
Rev.	Description	Date	Rev. by	Standard						

Printed: 24.02.2023 15:27

Template:

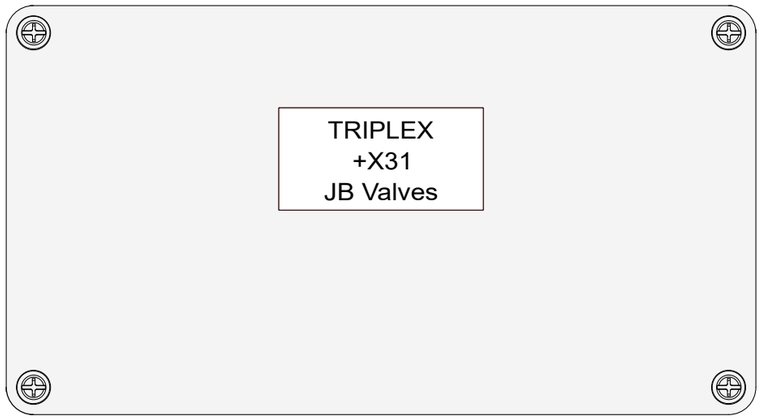

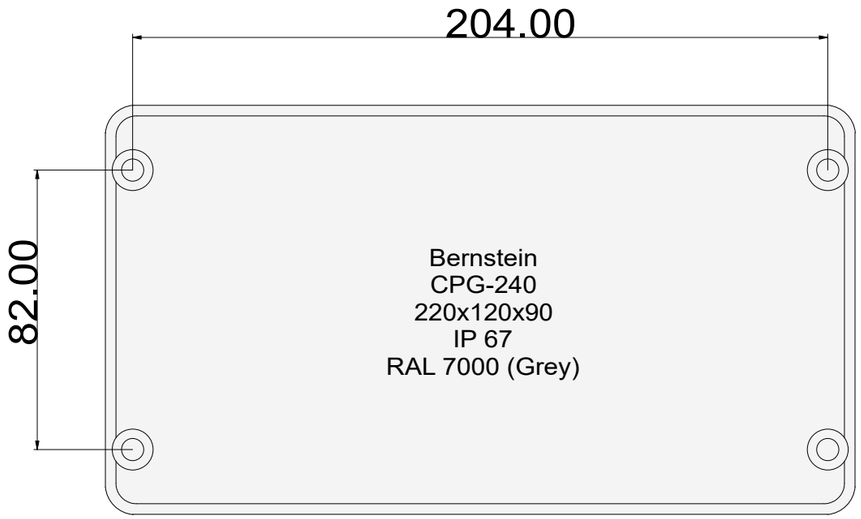

-JB1

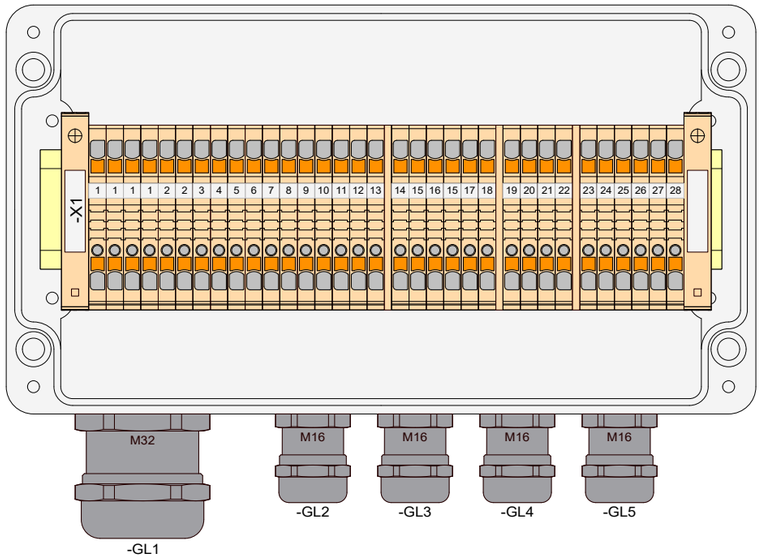

Rear View

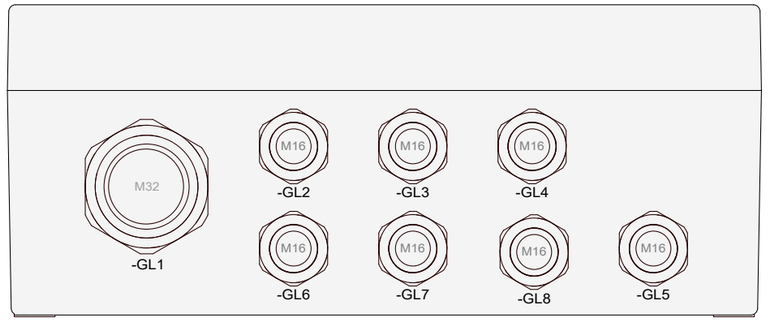

-S1

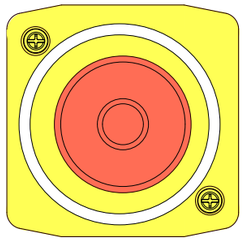

Front View

-S1

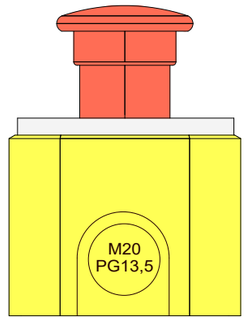

Top/Bottom View

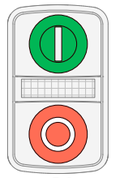

-S2

Component installed on equipment

Rev.	Description	Date	Rev. by	Standard	
05	For customer review	24.02.2023	GM	Date	14.10.2021
04	For customer review	17.02.2023	GM	Drawn by	KS
03	For customer review	14.02.2023	GM	Appr. by	BK

4/60185
CNP Freire
MBARI

TRIPLEX
A MacGregor company

Layout
CTD Davit
JB Valves

=CTD DAVIT

+X31

E-4503 - 03

Rev. 05

3 / 8

Printed: 24.02.2023 15:27

Template:

-A31.3

05	For customer review	24.02.2023	GM	Date	14.10.2021	4/60185 CNP Freire MBARI	TRIPLEX A MacGregor company	Layout CTD Davit RC Transmitter	=CTD DAVIT	E-4503 - 03
04	For customer review	17.02.2023	GM	Drawn by	KS				+A31	Rev. 05 5 / 8
03	For customer review	14.02.2023	GM	Appr. by	BK					
Rev.	Description	Date	Rev. by	Standard						

Printed: 24.02.2023 15:27

Template:

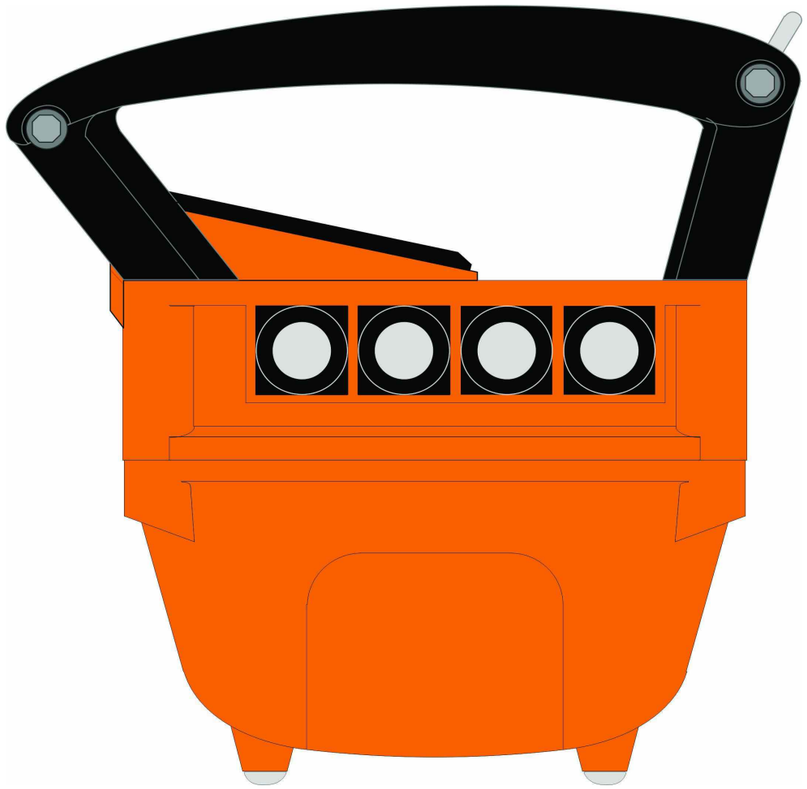

05	For customer review	24.02.2023	GM	Date	14.10.2021
04	For customer review	17.02.2023	GM	Drawn by	KS
03	For customer review	14.02.2023	GM	Appr. by	BK
Rev.	Description	Date	Rev. by	Standard	

4/60185
CNP Freire
MBARI

TRIPLEX
A MacGregor company

Layout
CTD Davit
RC Transmitter Side View

=CTD DAVIT
+A31

E-4503 - 03
Rev. 05
6 / 8

Printed: 24.02.2023 15:27

Template:

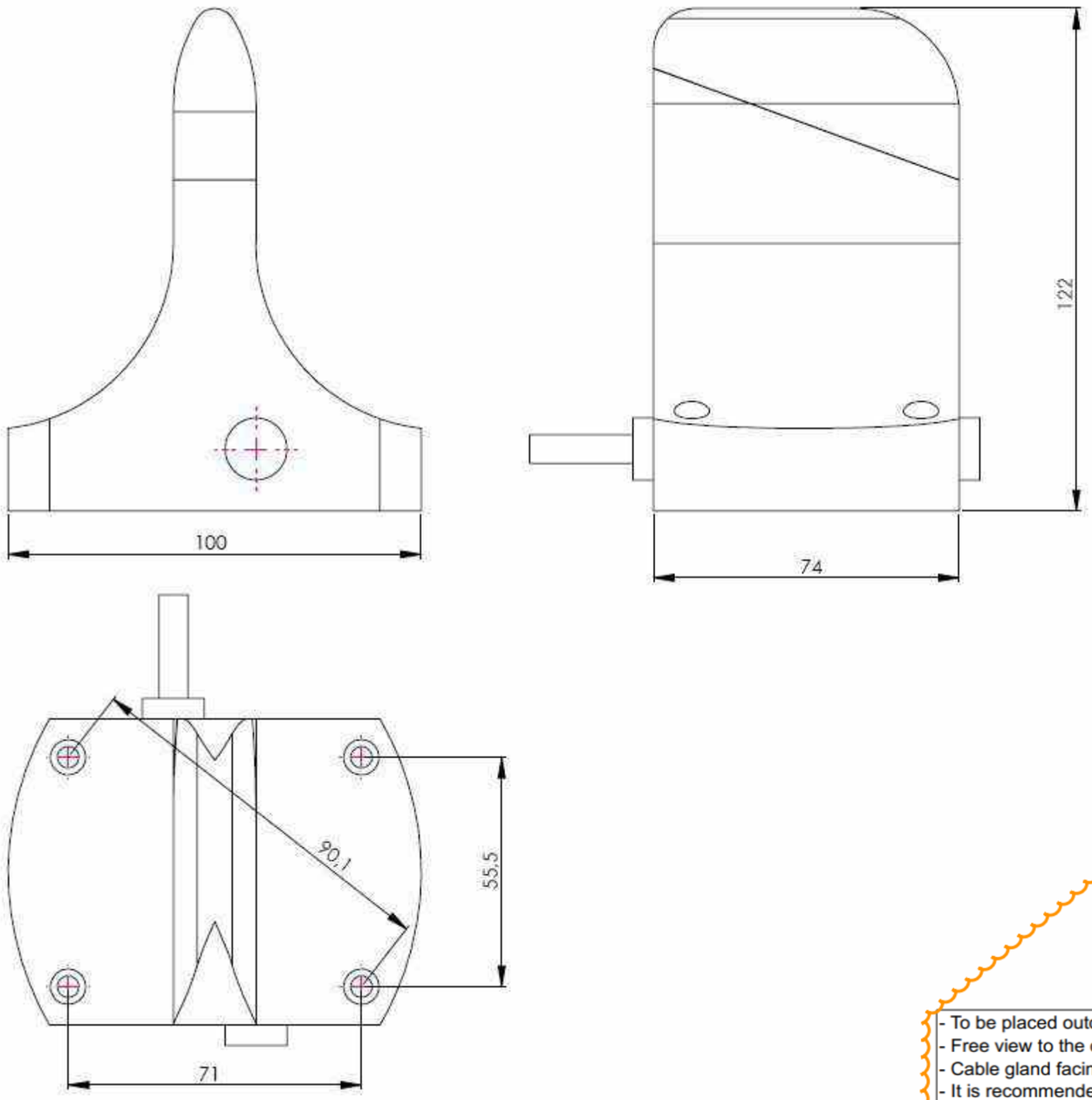

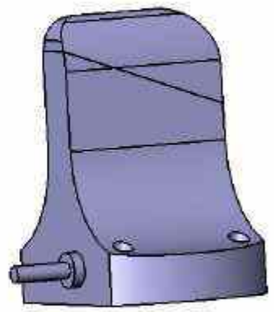

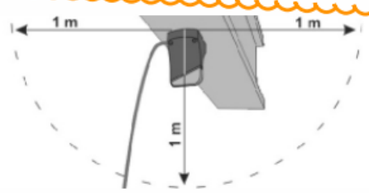

- To be placed outdoor as near as poosible to the main control cabinet.
- Free view to the operational area with no large obsticles to get the best signal perfomance.
- Cable gland facing downwards.
- It is recommended to find a spot that is protected from the environmental effects.
- ~~Recommended cable length <30m.~~

Rev.	Description	Date	Rev. by	Standard	
05	For customer review	24.02.2023	GM	Date	14.10.2021
04	For customer review	17.02.2023	GM	Drawn by	KS
03	For customer review	14.02.2023	GM	Appr. by	BK

4/60185
CNP Freire
MBARI

TRIPLEX
A MacGregor company

Layout
CTD Davit
RC Antenna

=CTD DAVIT
+A31

E-4503 - 03
Rev. 05
7 / 8

Printed: 24.02.2023 15:27

Template:

-JB1

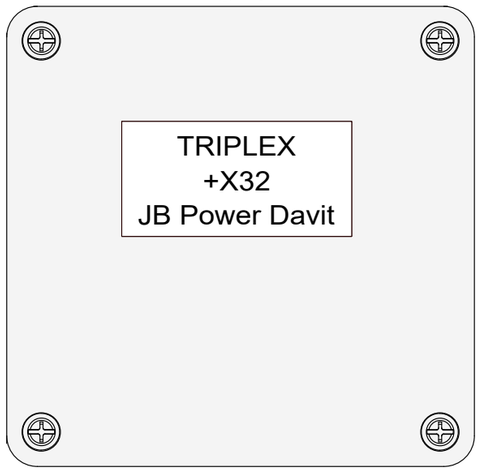

-JB1

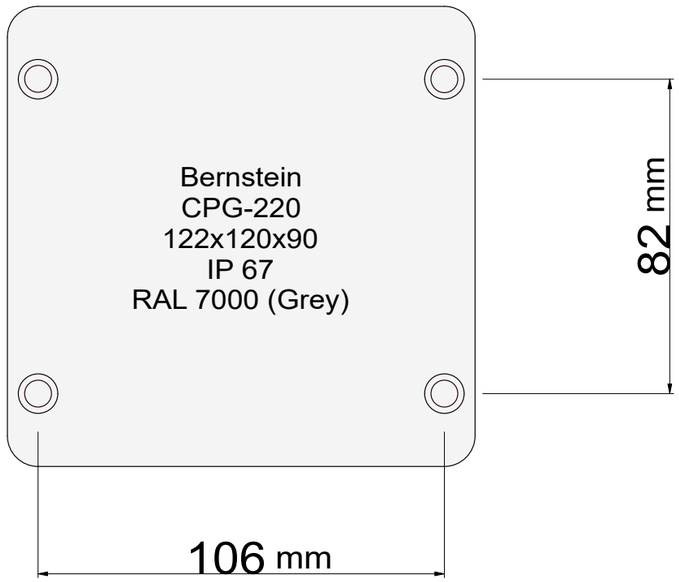

-JB1

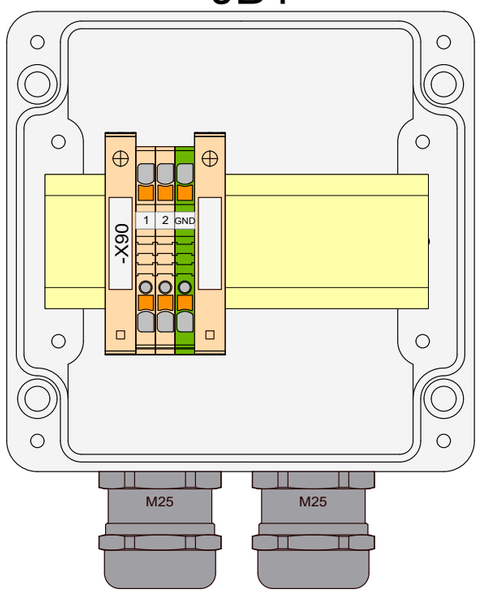

-JB1

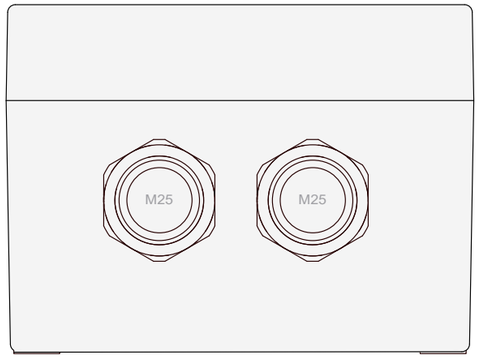

05	For customer review	24.02.2023	GM	Date	14.10.2021
04	For customer review	17.02.2023	GM	Drawn by	KS
03	For customer review	14.02.2023	GM	Appr. by	BK
Rev.	Description	Date	Rev. by	Standard	

4/60185
CNP Freire
MBARI

TRIPLEX
A MacGregor company

Layout
CTD Davit
JB Interface

=CTD DAVIT
+X32

E-4503 - 03
Rev. 05
8 / 8

Printed: 24.02.2023 15:27

Template:

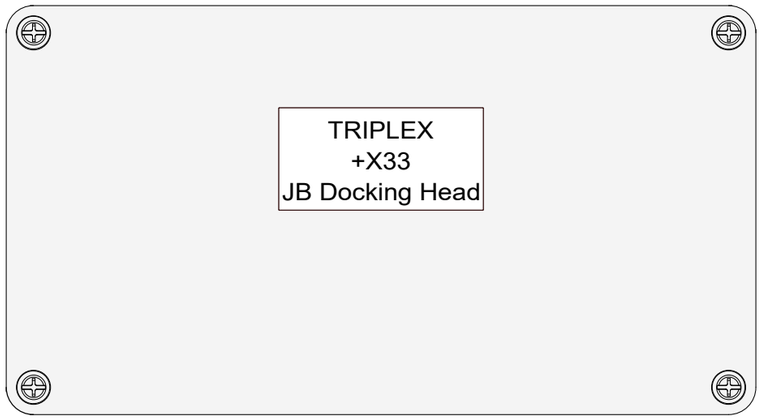

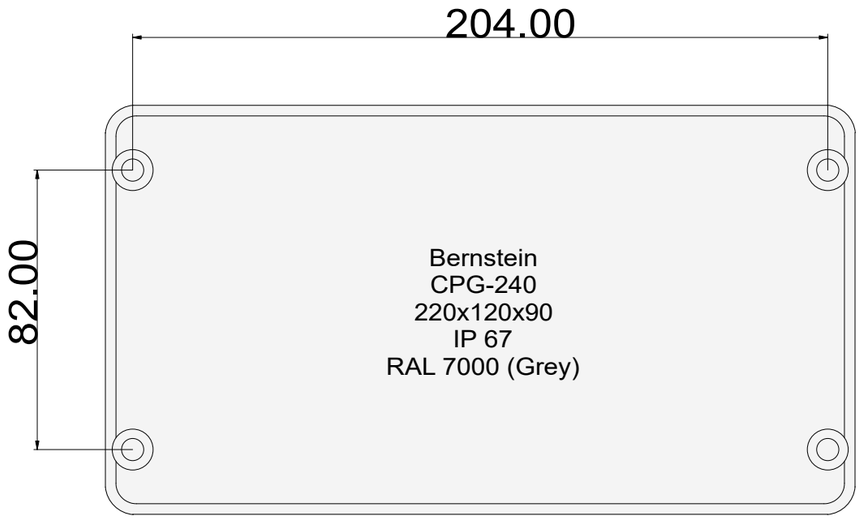

-JB1

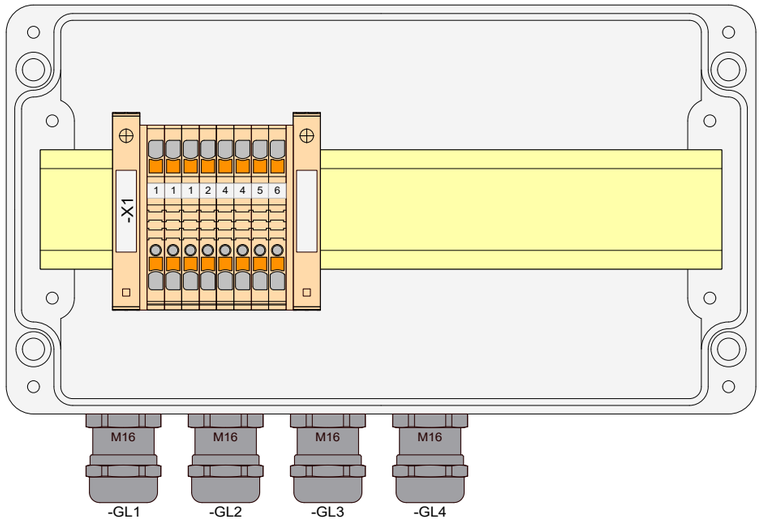

Rear View

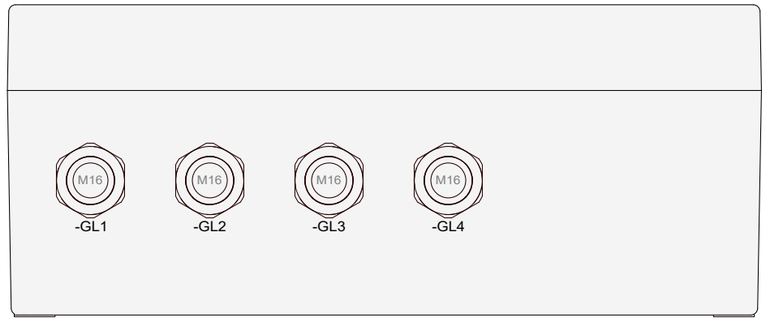

Component installed on equipment

Rev.	Description	Date	Rev. by	Standard	
05	For customer review	24.02.2023	GM	Date	14.10.2021
04	For customer review	17.02.2023	GM	Drawn by	KS
03	For customer review	14.02.2023	GM	Appr. by	BK

4/60185
CNP Freire
MBARI

TRIPLEX
A MacGregor company

Layout
CTD Davit
JB Docking Head

=CTD DAVIT
+X33

E-4503 - 03
Rev. 05
9 / 8

Printed: 24.02.2023 15:27

Template:

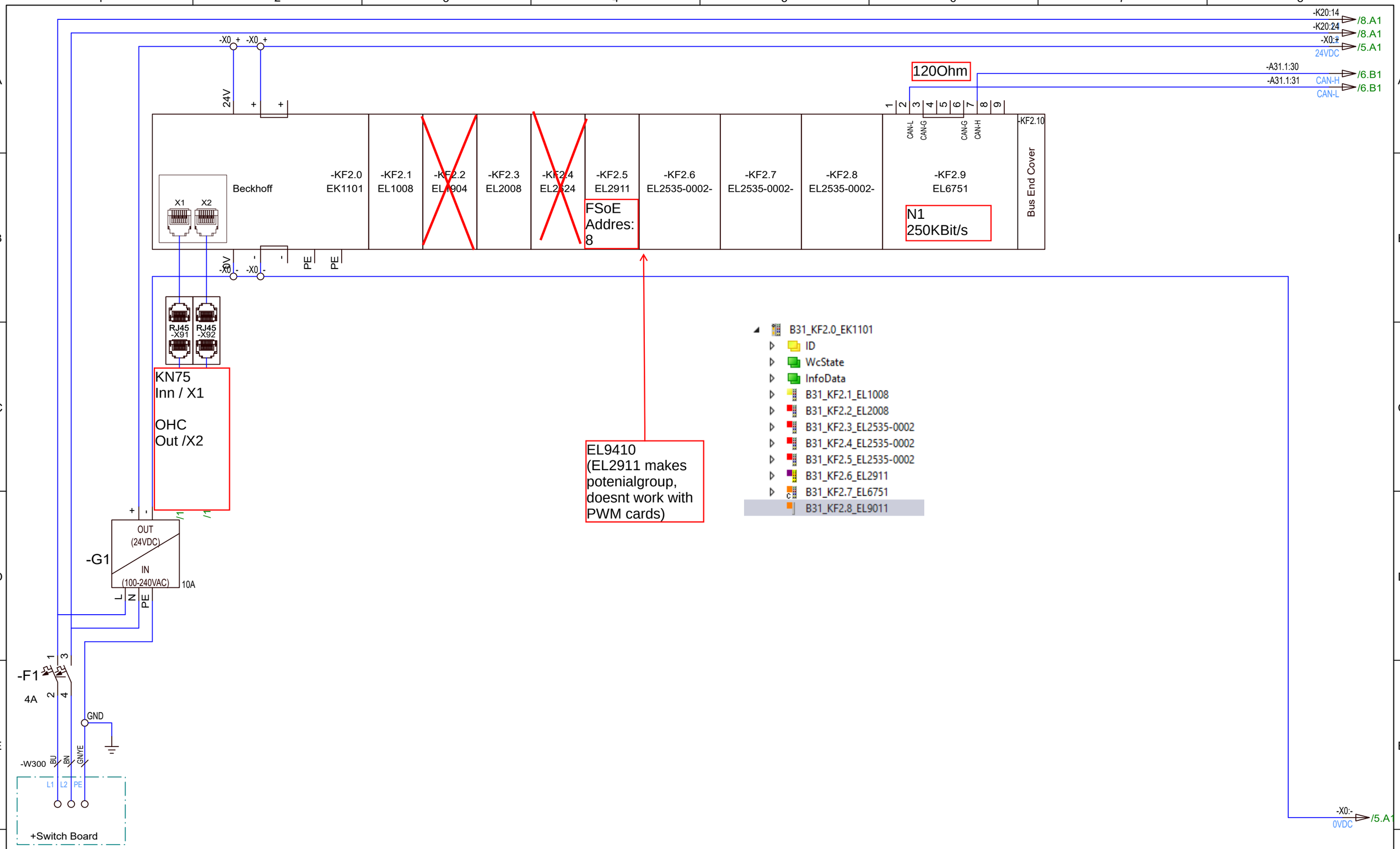

05	For customer review	24.02.2023	GM	Date	14.10.2021
04	For customer review	17.02.2023	GM	Drawn by	KS
03	For customer review	14.02.2023	GM	Appr. by	BK
Rev.	Description	Date	Rev. by	Standard	

4/60185
CNP Freire
MBARI

TRIPLEX
A MacGregor company

Circuit Diagram
CTD Davit
Control Cabinet

=CTD DAVIT
+B31

E-4503 - 04
Rev. 05
1 / 8

Printed: 24.02.2023 15:27

Template:

-KF2.1 Beckhoff EL1008

Pin	Pin Description	IO Type	Ref	IO Device Location	IO Device Type	IO Function Target	IO Function	IO Used	Signal
1	Digital Input	DI1	/6.C1	Control Cabinet	Switch	CTD	Manual Control	DI	
5	Digital Input	DI2	/7.B8	Valve Bank	Switch	HPU	Start		
2	Digital Input	DI3	/7.B8	Valve Bank	Switch	HPU	Stop		
6	Digital Input	DI4	/7.B6	Docking Head	Sensor	CTD	Fully Copressed	DI	
3	Digital Input	DI5	/7.B6	Docking Head	Sensor	CTD	Half Copressed	DI	
7	Digital Input	DI6	Control Cabinet | switch |Auto control					DI	
4	Digital Input	DI7						DI	
8	Digital Input	DI8						DI	

~~-KF2.2 Beckhoff EL1904~~

Pin	Pin Description	IO Type	Ref	PLC Comment 1	PLC Comment 2	PLC Symbollic Adress
1		I1	/5.B3	Emergency Stop		DIN/DOUT
2						
3		I2	/5.B4	Emergency Stop		DIN/DOUT
4						
5		I3	/5.B1	Emergency Stop		DIN/DOUT
7		I4	/5.B1	Emergency Stop		DIN/DOUT

-KF2.3 Beckhoff EL2008

Pin	Pin Description	IO Type	Ref	IO Device Location	IO Device Type	IO Function Target	IO Function	IO Used	Signal
1	Digital Output	DO1	DO1 | deck area | EMS | Ligth						
5	Digital Output	DO2	DO2 | deck area | EMS | Ligth						
2	Digital Output	DO3	DO3 | Crane body | Docking head | Free / fixed						
6	Digital Output	DO4	DO4 | valvebank | Pump running | Ligth						
3	Digital Output	DO5	DO5 | Crane Body | Floodligth | Ligth						
7	Digital Output	DO6							
4	Digital Output	DO7						DO	
8	Digital Output	DO8						DO	

~~-KF2.4 Beckhoff EL2624~~

Pin	Pin Description	IO Type	Ref	IO Device Location	IO Device Type	IO Function Target	IO Function	IO Used	Signal
1	Com	RO1	/8.B2	Control Cabinet	Switch	Floodlight	ON	RO	NO
2	Relay Output NO								
5	Com	RO2						RO	NO
6	Relay Output NO								
3	Com	RO3						RO	NO
4	Relay Output NO								
7	Com	RO4						RO	NO
8	Relay Output NO								

Rev.	Description	Date	Rev. by	Standard	
05	For customer review	24.02.2023	GM	Date	14.10.2021
04	For customer review	17.02.2023	GM	Drawn by	KS
03	For customer review	14.02.2023	GM	Appr. by	BK

4/60185
CNP Freire
MBARI

TRIPLEX
A MacGregor company

Circuit Diagram
CTD Davit
IO List

=CTD DAVIT
+B31

E-4503 - 04
Rev. 05
2 / 8

Printed: 24.02.2023 15:27

Template:

-KF2.5 Beckhoff EL2911

Pin	Pin Description	IO Type	Ref	IO Device Location	IO Device Type	IO Function Target	IO Function	IO Used	Signal
1	+	DIO1	From EL1904						
2	-								
5	+	DIO2							
6	-								
3	+	DIO3							
4	-								
7	+	DIO4							
8	-								
4`	+	DIO5							
3`	-								
8`	+	DIO6							
7`	-								
2`	+	DIO7	/7.B1	Valve Bank	CTD	Stop Valve	OUT		
3`	-								
6`		DIO8							
7`	-								

-KF2.6 Beckhoff EL2535-0002-

Pin	Pin Description	IO Type	Ref	IO Device Location	IO Device Type	IO Function Target	IO Function	IO Used	Signal
1	PWM Output A1	PWM1	/7.B2	Valve Bank	Valve	Telescope	In	AO+	PWM
5	PWM Output A2								
3	0Va								
4	Digital Input	DI1	/7.B3					DI	
2	PWM Output B1	PWM2		Valve Bank	Valve	Telescope	Out	AO+	PWM
6	PWM Output B2								
7	0Vb								
8	Digital Input	DI2							

Rev.	Description	Date	Rev. by	Standard	
05	For customer review	24.02.2023	GM	Date	14.10.2021
04	For customer review	17.02.2023	GM	Drawn by	KS
03	For customer review	14.02.2023	GM	Appr. by	BK

4/60185
CNP Freire
MBARI

TRIPLEX
A MacGregor company

Circuit Diagram
CTD Davit
IO List

=CTD DAVIT
+B31

E-4503 - 04
Rev. 05
3 / 8

Printed: 24.02.2023 15:27

Template:

-KF2.7 Beckhoff EL2535-0002-

Pin	Pin Description	IO Type	Ref	IO Device Location	IO Device Type	IO Function Target	IO Function	IO Used	Signal
1	PWM Output A1	PWM1	/7.B3	Valve Bank	Valve	Tilt	In	AO+	PWM
5	PWM Output A2								
3	0Va								
4	Digital Input	DI1	/7.B4					DI	
2	PWM Output B1	PWM2		Valve Bank	Valve	Tilt	Out	AO+	PWM
6	PWM Output B2								
7	0Vb								
8	Digital Input	DI2						DI	

-KF2.8 Beckhoff EL2535-0002-

Pin	Pin Description	IO Type	Ref	IO Device Location	IO Device Type	IO Function Target	IO Function	IO Used	Signal
1	PWM Output A1	PWM1	/7.B4	Valve Bank	Valve	Docking Head	In	AO+	PWM
5	PWM Output A2								
3	0Va								
4	Digital Input	DI1	/7.B4					DI	
2	PWM Output B1	PWM2		Valve Bank	Valve	Docking Head	Out	AO+	PWM
6	PWM Output B2								
7	0Vb								
8	Digital Input	DI2						DI	

-KF2.9 Beckhoff EL6751

DSUB-9	Pin Description	IO Type	Ref
1		CAN	/1.B6
2	CAN-L		
3	CAN-G		
4			
5			
6	CAN-G		
7	CAN-H		
8			
9			

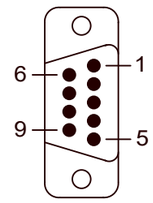

D-SUB
9-Pin
Male

Rev.	Description	Date	Rev. by	Standard	
05	For customer review	24.02.2023	GM	Date	14.10.2021
04	For customer review	17.02.2023	GM	Drawn by	KS
03	For customer review	14.02.2023	GM	Appr. by	BK

4/60185
CNP Freire
MBARI

TRIPLEX
A MacGregor company

Circuit Diagram
CTD Davit
IO List

=CTD DAVIT
+B31

E-4503 - 04
Rev. 05
4 / 8

Printed: 24.02.2023 15:27

Template:

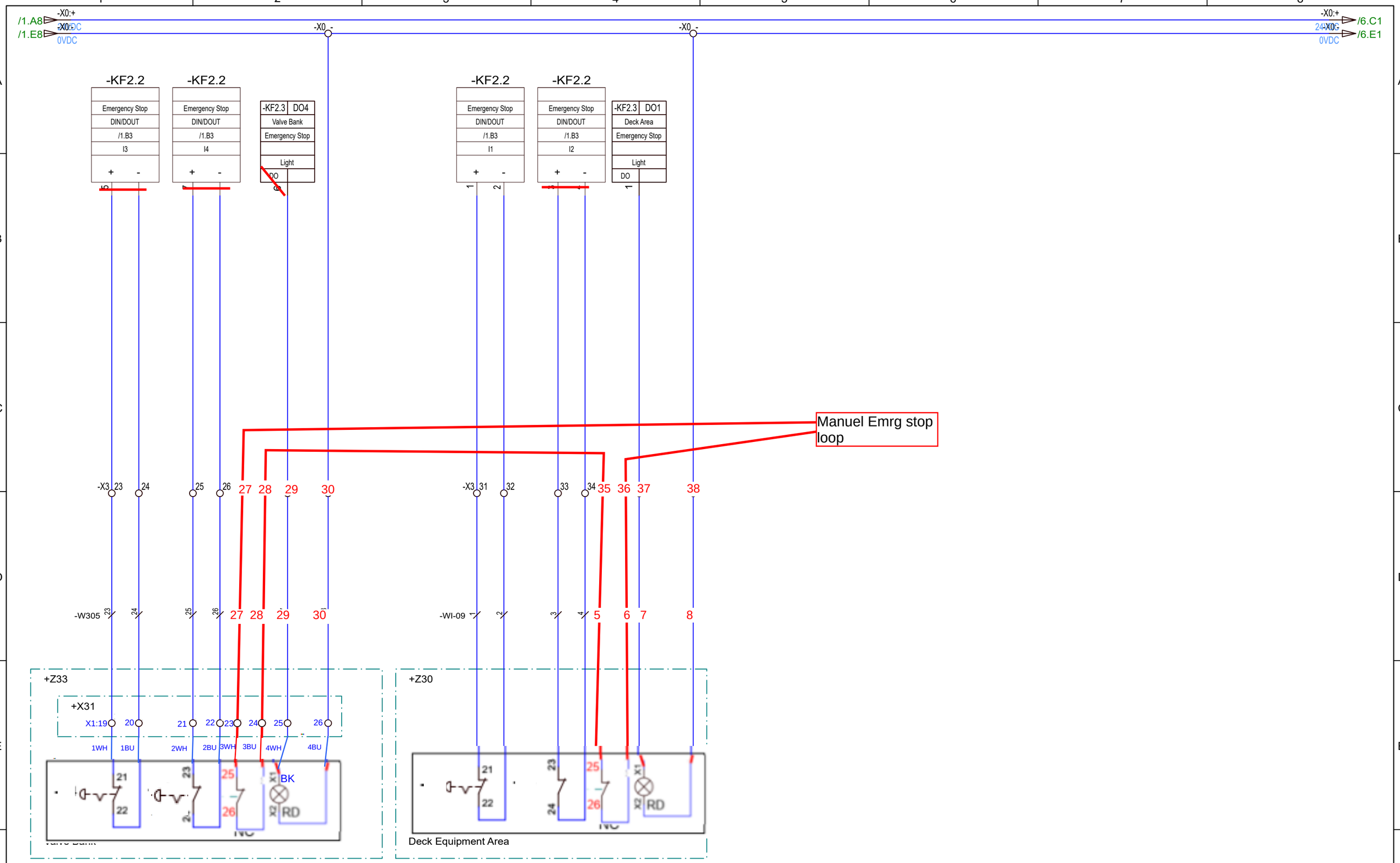

05	For customer review	24.02.2023	GM	Date	14.10.2021	4/60185 CNP Freire MBARI	TRIPLEX A MacGregor company	Circuit Diagram CTD Davit Control Cabinet	=CTD DAVIT	E-4503 - 04
04	For customer review	17.02.2023	GM	Drawn by	KS				+B31	Rev. 05 5 / 8
03	For customer review	14.02.2023	GM	Appr. by	BK					
Rev.	Description	Date	Rev. by	Standard						

Printed: 24.02.2023 15:27

Template:

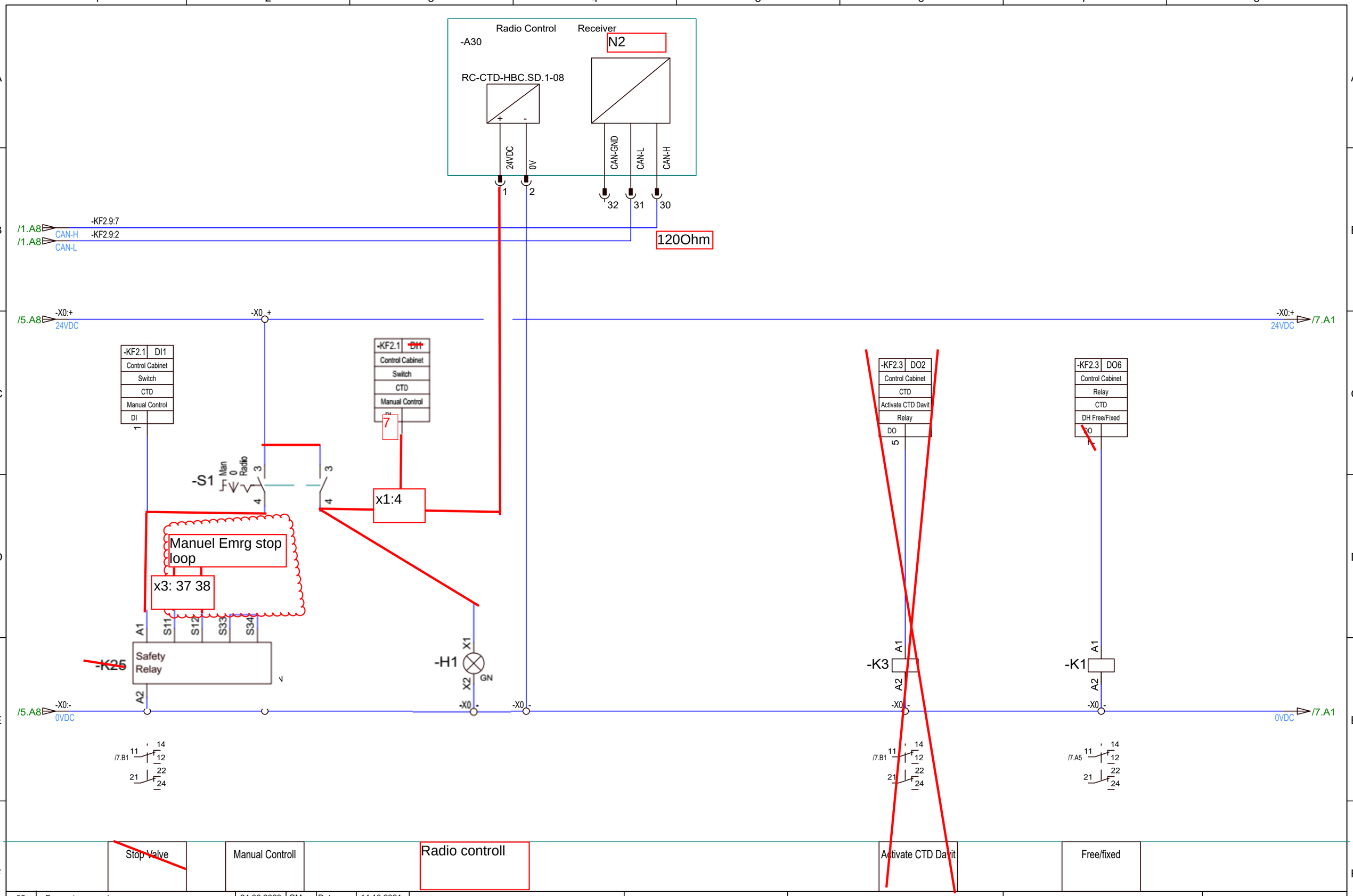

Rev.	Description	Date	Rev. by	Standard	
05	For customer review	24.02.2023	GM	Date	14.10.2021
04	For customer review	17.02.2023	GM	Drawn by	KS
03	For customer review	14.02.2023	GM	Appr. by	BK

4/60185
CNP Freire
MBARI

TRIPLEX
A MacGregor company

Circuit Diagram
CTD Davit
Control Cabinet

=CTD DAVIT
+B31

E-4503 - 04
Rev. 05
6 / 8

Printed: 24.02.2023 15:27

Template:

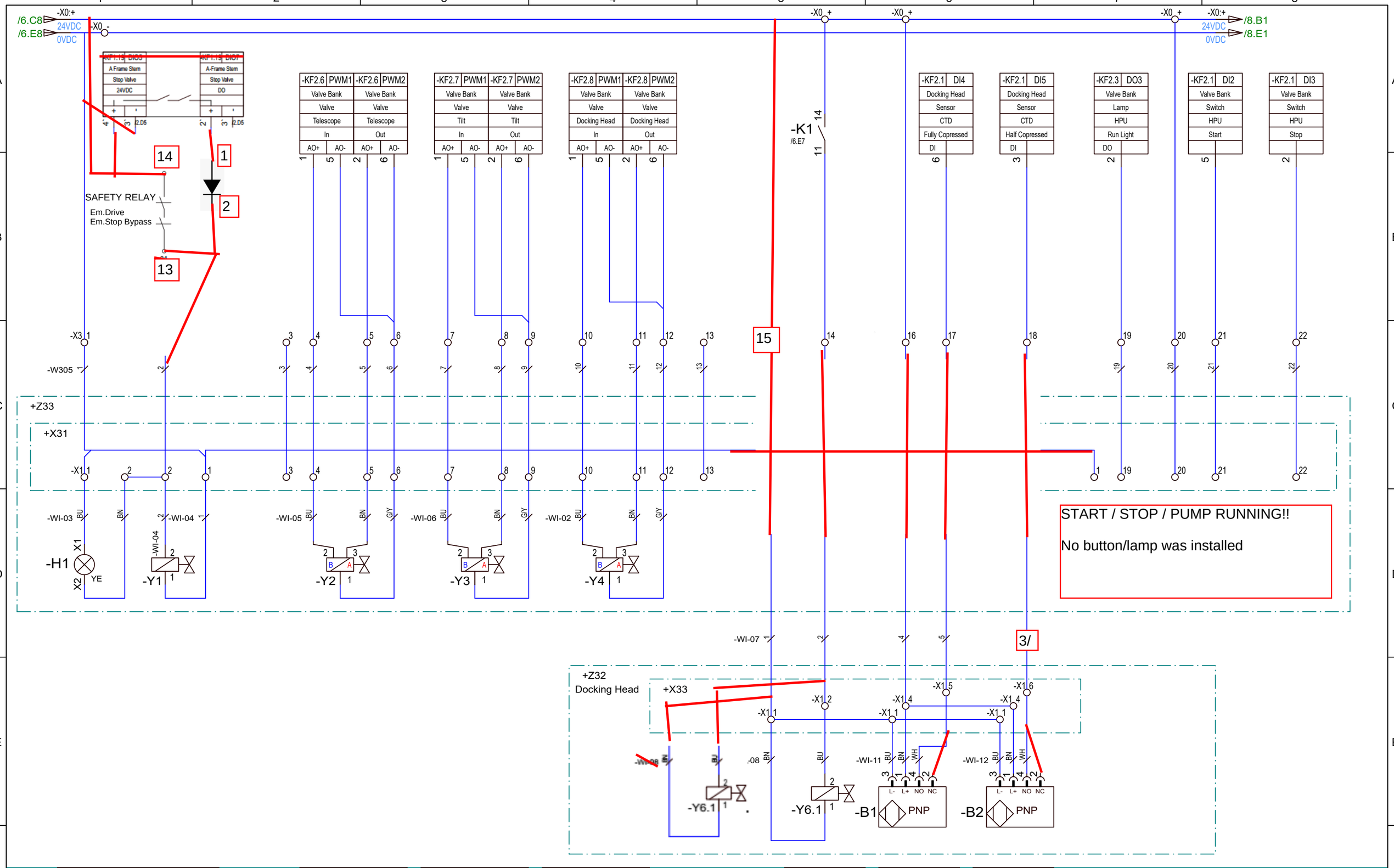

CPH Active Light	CPH Stop Valve	Telescope 2 In / 3 Out	Tilt 2 In / 3 Out	Docking Head 2 In / 3 Out	DH Free/fixed	DH Free/fixed	Docking Head Fully Compressed	Docking Head Half Compressed
	Activate							

Rev.	Description	Date	Rev. by	Standard	
05	For customer review	24.02.2023	GM	Date	14.10.2021
04	For customer review	17.02.2023	GM	Drawn by	KS
03	For customer review	14.02.2023	GM	Appr. by	BK

4/60185
CNP Freire
MBARI

TRIPLEX
A MacGregor company

Circuit Diagram
CTD Davit
Control Cabinet

=CTD DAVIT
+B31

E-4503 - 04
Rev. 05
7 / 8

Printed: 24.02.2023 15:27

Template:

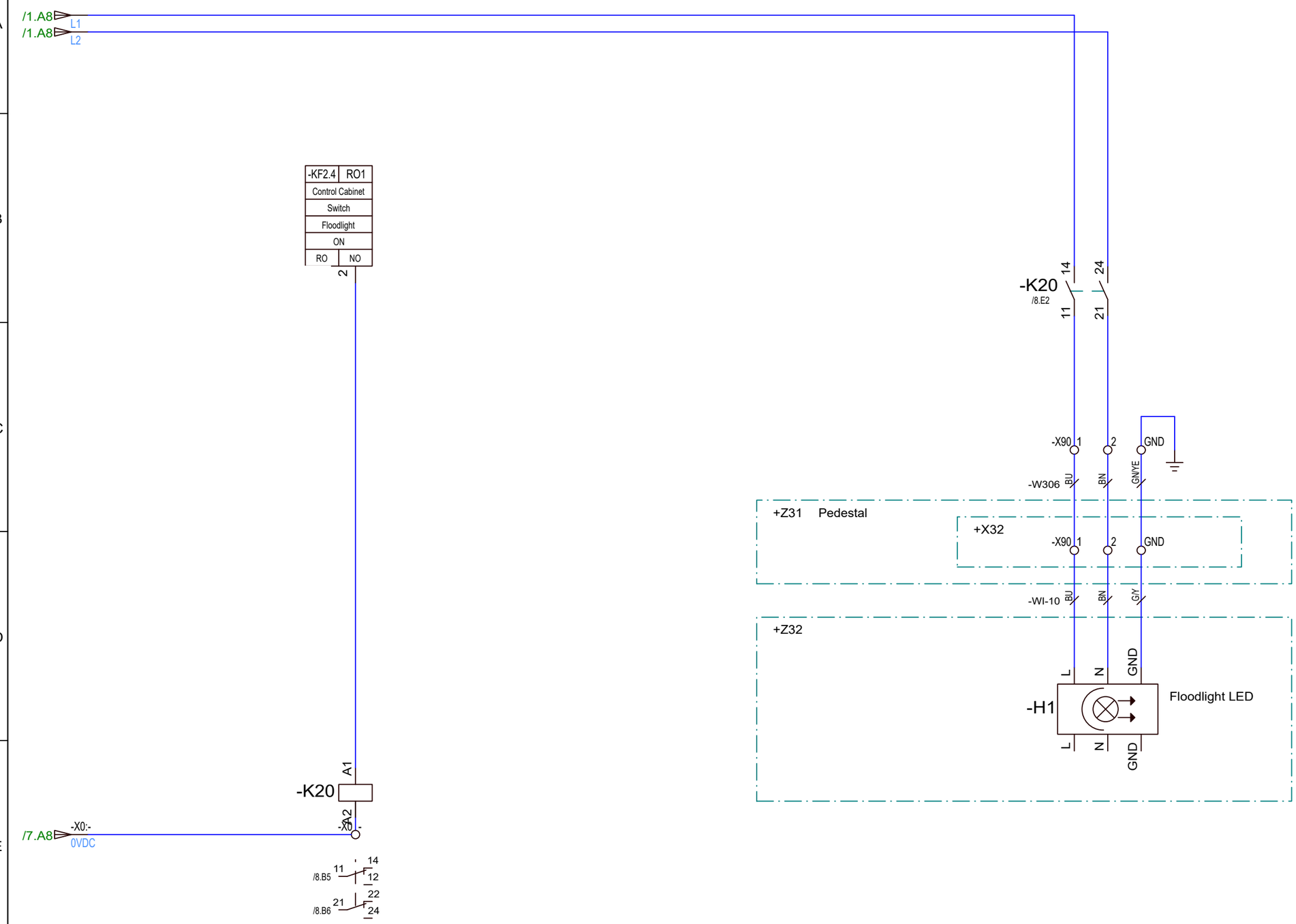

Floodlight

Floodlight LED

05	For customer review	24.02.2023	GM	Date	14.10.2021
04	For customer review	17.02.2023	GM	Drawn by	KS
03	For customer review	14.02.2023	GM	Appr. by	BK
Rev.	Description	Date	Rev. by	Standard	

4/60185
CNP Freire
MBARI

TRIPLEX
A MacGregor company

Circuit Diagram
CTD Davit
Control Cabinet

=CTD DAVIT

+B31

E-4503 - 04

Rev. 05

8 / 8

Printed: 24.02.2023 15:27

Template:

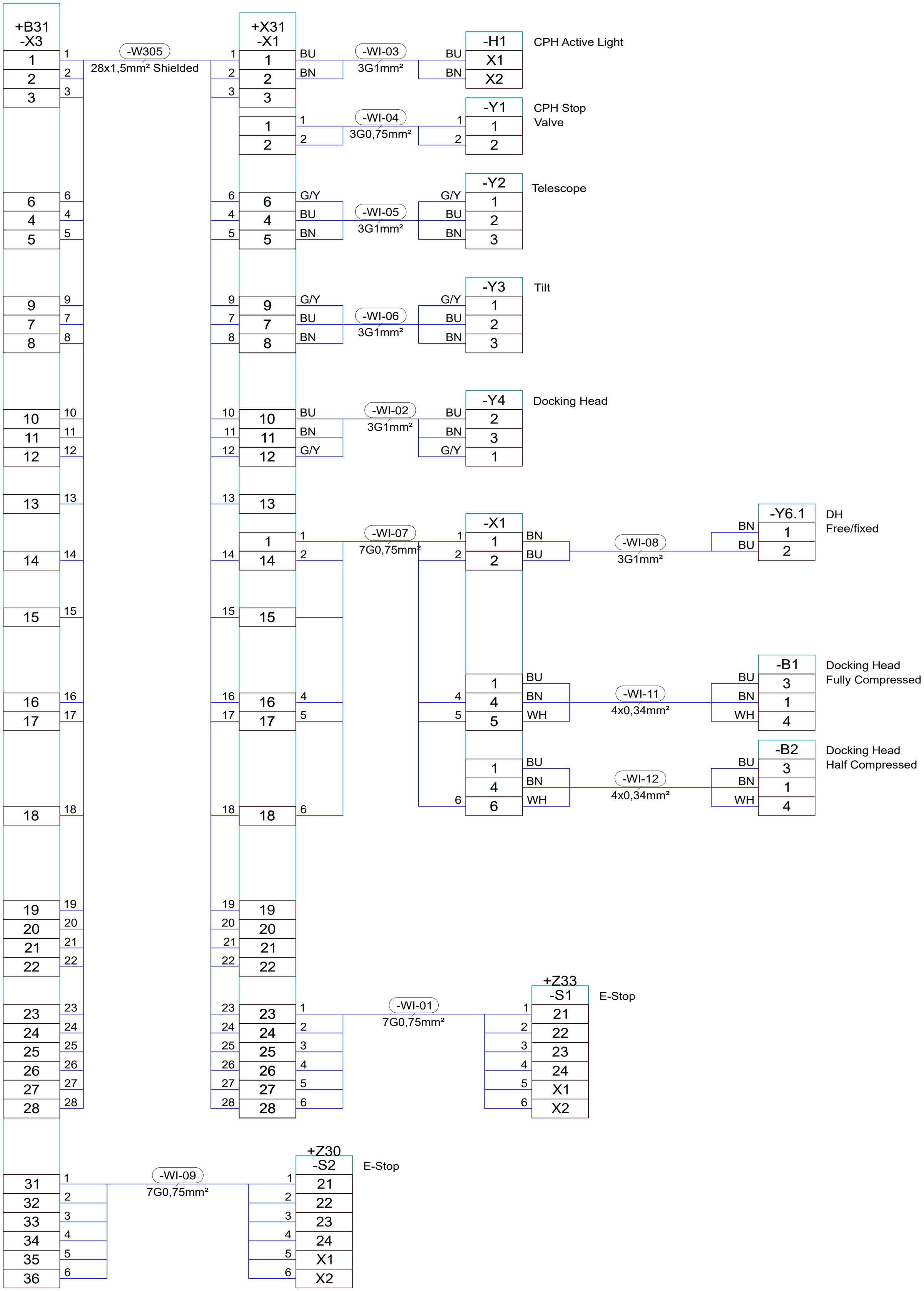

Rev.	Description	Date	Rev. by	Standard	
05	For customer review	24.02.2023	GM	Date	14.10.2021
04	For customer review	17.02.2023	GM	Drawn by	KS
03	For customer review	14.02.2023	GM	Appr. by	BK

4/60185
CNP Freire
MBARI

TRIPLEX
A MacGregor company

Termination Diagram
CTD Davit

=CTD DAVIT

E-4503 - 05

Rev. 05

1 / 1

Printed: 24.02.2023 15:27

Template:

Device ID	Device	Part No.	El. No.	Qty	Unit	Description	Manufacturer	Link
-WI-01,-WI-07,-WI-09	ROFLEX 7G0.75	07915015		3	Pcs	CABLE, 7G0,75mm²	Lapp	
-WI-02,-WI-03,-WI-05,-WI-06,-WI-08,-WI-10	ROFLEX 3G1	07915017		6	Pcs	CABLE, 3G1mm²	Lapp	
-WI-04	7074-18021-2360500	07930051		1	Pcs	CONNECTOR, VALVE, MURR, 5M, SS	Murr	
-WI-11,-WI-12	V1-WV4A-5M-PUR	07917043		2	Pcs	SENSOR, CABLE, M12, 4-PIN, ANGLE, 5M	Pepperl & Fuchs	

Rev.	Description	Date	Rev. by	Standard	
05	For customer review	24.02.2023	GM	Date	14.10.2021
04	For customer review	17.02.2023	GM	Drawn by	KS
03	For customer review	14.02.2023	GM	Appr. by	BK

4/60185
CNP Freire
MBARI

TRIPLEX
A MacGregor company

Part List
CTD Davit

=CTD DAVIT

E-4503 - 07

Rev. 05

Printed: 24.02.2023 15:27

Template:

Device ID	Device	Part No.	El. No.	Qty	Unit	Description	Manufacturer	Link
-A31	RC-CTD-HBC.SD.1-08	400198451		1	Pcs	CTD-Davit 08	HBC	
-CAB1	ADO201	07939034	24 138 75	1	Pcs	CABINET, DOORSTOPPER, ADO, ELDON	Eldon	
-CAB1	MAS0605030	400089006	24 174 95	1	Pcs	CABINET, 600x500x300 ELDON*	Eldon	
-DUCT1..-DUCT4	HA760040	07920015	12 857 18	1.222	M	CABLE TRAY, 60X40, GREY, W/LID	Tehalit Hager	
-DUCT5	HA760025	07920014	12 857 17	0.2	M	CABLE TRAY, 60X25, GREY, W/LID	Tehalit Hager	
-F1	iC60H/C 02-2	07938004	16 760 61	1	Pcs	FUSE, AUTOMAT, 2A, 2-POLE, C	Schneider	
-G1	CS10.241	07949016	66 040 29	1	Pcs	POWER SUPPLY, PULSE, 10A, 230/24	Puls	
-GL1	WADI-TEC EMC M40 Ø24-30	400075304	12 492 78	1	Pcs	CABLE GLAND, BRASS, EMC, Ø24-30	Elis	
-GL3,-GL4	WADI-TEC EMC M32 Ø17-24	07928087	12 492 76	2	Pcs	CABLE GLAND, BRASS, EMC, Ø17-24	Elis	
-GL5,-GL6	WADI-TEC EMC M25 Ø10-14.5	07928084	12 492 70	2	Pcs	CABLE GLAND, BRASS, EMC, Ø10-14,5	Elis	
-GL8..-GL10	WADI-TEC EMC M20 Ø8-12.5	07928083	12 492 68	3	Pcs	CABLE GLAND, BRASS, EMC, Ø8-12,5	Elis	
-H1	ZBVB3	07924016	43 032 26	1	Pcs	LAMP, LED, GN, 24V	Schneider	
-K1..-K3,-K20	C7A20FX24D	07936015	43 783 87	4	Pcs	RELAY, RELECO, 2-POLE, 24V DC, 10A	Releco	
-K1..-K3,-K20	S7-I/O			4	Pcs	RELAY, SOCKET	Releco	
-KF2.0	EK1101	400142335		1	Pcs	EtherCAT Coupler w ID settings	Beckhoff	
-KF2.1	EL1008	400142339		1	Pcs	8 Digital Inputs	Beckhoff	
-KF2.2	EL1904			1	Pcs	TwinSAFE 4 Digital Inputs	Beckhoff	
-KF2.3	EL2008	400142342		1	Pcs	8 Digital Outputs	Beckhoff	
-KF2.4	EL2624	400142344		1	Pcs	4 Relay Outputs	Beckhoff	
-KF2.5	EL2911	400142346		1	Pcs	TwinSAFE 4 Digital Inputs, 1x Output	Beckhoff	
-KF2.6,-KF2.7,-KF2.8	EL2535-0002-	400142343		3	Pcs	2 PWM Outputs, 2 Digtal Inputs	Beckhoff	
-KF2.9	EL6751	400142409		1	Pcs	CANopen master/slave terminal	Beckhoff	
-KF2.10	EL9011	400142410		1	Pcs	Bus end cap	Beckhoff	
-RAIL1..-RAIL4	TS 35X7.5 6.2MM HULLET	07940001	12 692 14	1.323	M	RAIL, PERFORATED, TS35 x 7,5 x 6,2mm	Weidmüller	
-S1	ZB4BK1333	07960019	43 025 24	1	Pcs	CONTR. SWITCH, 3 POS, LED GN	Schneider	
-S1	ZB4BZ009	07961012	43 027 45	1	Pcs	CONTR. ACC, SOCKET, METAL	Schneider	
-S1	ZBE101	07961013	43 004 23	2	Pcs	CONTR. ACC, CONTACTBLOCK, 1NO	Schneider	
-TAG1	US-EMLP 100X60 4 Line	07958308		1	Pcs	TAG, SIGN, THERMOMARK CARD, W/GLUE	Phoenix Contact	
-TAG2	US-EMLP-HA 24	400075270		1	Pcs	TAG, SIGN, THERMOMARK CARD	Phoenix Contact	
-X0	AEP 3C 2.5	400069937	12 694 11	1	Pcs	TERMINAL BLOCK, SNAP-IN, END PLATE	Weidmüller	
-X0	AEP AP12			1	Pcs	TERMINAL BLOCK, SNAP-IN, END PLATE	Weidmüller	
-X0 (1,1)	A3C 2.5	400069932	12 654 01	2	Pcs	TERMINAL BLOCK, SNAP-IN, DOUBLE	Weidmüller	
-X0 (-)	AAP12 10/4X2.5 LO-LI BL			1	Pcs	TERMINAL BLOCK, SNAP-IN,	Weidmüller	

Rev.	Description	Date	Rev. by	Standard	
05	For customer review	24.02.2023	GM	Date	14.10.2021
04	For customer review	17.02.2023	GM	Drawn by	KS
03	For customer review	14.02.2023	GM	Appr. by	BK

4/60185
CNP Freire
MBARI

TRIPLEX
A MacGregor company

Part List
CTD Davit

=CTD DAVIT
+B31

E-4503 - 07
Rev. 05
2 / 10

Printed: 24.02.2023 15:27

Template:

Device ID	Device	Part No.	El. No.	Qty	Unit	Description	Manufacturer	Link
-X0 (-,-,-,-,2)	AAP12 2.5 LI BL			5	Pcs	TERMINAL BLOCK, SNAP-IN,	Weidmüller	
-X0 (+)	AAP12 10/4X2.5 LO-LI RD			1	Pcs	TERMINAL BLOCK, SNAP-IN,	Weidmüller	
-X0 (+,+,+)	AAP12 2.5 LI RD			3	Pcs	TERMINAL BLOCK, SNAP-IN,	Weidmüller	
-X0 (GND)	JORDSKINNE 21	07918007		1	Pcs	RAIL, GRN, BRASS, 21 SLOT	Weidmüller	
-X0 (GND)	WPE 4	07918003	12 688 16	1	Pcs	-TERMINAL BLOCK, GND, 101010	Weidmüller	
-X0 (GND,GND)	A3C 2.5 PE	400074010	12 654 16	2	Pcs	TERMINAL BLOCK, SNAP-IN, GND	Weidmüller	
-X0,-X3,-X90	AEB 35 SC/1	400073887	12 654 34	8	Pcs	TERMINAL BLOCK, SNAP-IN, END LOCK	Weidmüller	
-X3	AEP 3T 2.5	400209845	12 694 40	1	Pcs	TERMINAL BLOCK, SNAP-IN, END PLATE	Weidmüller	
-X3 (1,4,7,10,13,16,19,22,25, 28,31,34)	A3T 2.5			12	Pcs	TERMINAL BLOCK, SNAP-IN, THREE HIGHTS	Weidmüller	
-X90 (1-2)	A2C 2.5	400069931	12 654 00	2	Pcs	TERMINAL BLOCK, SNAP-IN, SINGLE	Weidmüller	
-X90 (GND)	A2C 2.5 PE	400074009	12 654 15	1	Pcs	TERMINAL BLOCK, SNAP-IN, GND	Weidmüller	
-X91,-X92	IE-TO-RJ45-FJ-B	07930061		2	Pcs	CONNECTOR, FEMALE, RJ45, RAIL MOUNT	Weidmüller	

Rev.	Description	Date	Rev. by	Standard	
05	For customer review	24.02.2023	GM	Date	14.10.2021
04	For customer review	17.02.2023	GM	Drawn by	KS
03	For customer review	14.02.2023	GM	Appr. by	BK

4/60185
CNP Freire
MBARI

TRIPLEX
A MacGregor company

Part List
CTD Davit

=CTD DAVIT
+B31

E-4503 - 07
Rev. 05
3 / 10

Printed: 24.02.2023 15:27

Template:

Device ID	Device	Part No.	El. No.	Qty	Unit	Description	Manufacturer	Link
-GL1	ST-M 32 x 1.5	07928035	12 477 16	1	Pcs	CABLE GLAND, PLASTIC, SKINTOP, Ø17-25	Lapp	
-GL2..-GL8	ST-M 16 x 1.5	07928032	12 477 13	7	Pcs	CABLE GLAND, PLASTIC, SKINTOP, Ø3,5-8	Lapp	
-JB1	CPG-240	07904004		1	Pcs	JUNCTION BOX, POLYESTER, 220x120x90	Bernstein	
-RAIL1	TS 35X7.5 6.2MM HULLET	07940001	12 692 14	0.2	M	RAIL, PERFORATED, TS35 x 7,5 x 6,2mm	Weidmüller	
-TAG1	US-EMLP 60X30	07958306	12 684 08	1	Pcs	TAG, SIGN, THERMOMARK CARD, W/GLUE	Phoenix Contact	
-X1	AEP 2C 2.5	400069933	12 694 10	3	Pcs	TERMINAL BLOCK, SNAP-IN, END PLATE	Weidmüller	
-X1 (1,1,1,1-2,2-15,15-28),-X2 (1-2)	A2C 2.5	400069931	12 654 00	35	Pcs	TERMINAL BLOCK, SNAP-IN, SINGLE	Weidmüller	
-X1,-X2	AEB 35 SC/1	400073887	12 654 34	4	Pcs	TERMINAL BLOCK, SNAP-IN, END LOCK	Weidmüller	

Rev.	Description	Date	Rev. by	Standard	
05	For customer review	24.02.2023	GM	Date	14.10.2021
04	For customer review	17.02.2023	GM	Drawn by	KS
03	For customer review	14.02.2023	GM	Appr. by	BK

4/60185
CNP Freire
MBARI

TRIPLEX
A MacGregor company

Part List
CTD Davit

=CTD DAVIT
+X31

E-4503 - 07
Rev. 05
4 / 10

Printed: 24.02.2023 15:27

Template:

Device ID	Device	Part No.	El. No.	Qty	Unit	Description	Manufacturer	Link
-GL1,-GL2	ST-M 25 x 1.5	07928034	12 477 15	2	Pcs	CABLE GLAND, PLASTIC, SKINTOP, Ø12-18	Lapp	
-JB1	CPG-220	07904002		1	Pcs	JUNCTION BOX, POLYESTER, 122x120x90	Bernstein	
-RAIL1	TS 35X7.5 6.2MM HULLET	07940001	12 692 14	0.1	M	RAIL, PERFORATED, TS35 x 7,5 x 6,2mm	Weidmüller	
-TAG1	US-EMLP 60X30	07958306	12 684 08	1	Pcs	TAG, SIGN, THERMOMARK CARD, W/GLUE	Phoenix Contact	
-X90	AEB 35 SC/1	400073887	12 654 34	2	Pcs	TERMINAL BLOCK, SNAP-IN, END LOCK	Weidmüller	
-X90 (1-2)	A2C 2.5	400069931	12 654 00	2	Pcs	TERMINAL BLOCK, SNAP-IN, SINGLE	Weidmüller	
-X90 (GND)	A2C 2.5 PE	400074009	12 654 15	1	Pcs	TERMINAL BLOCK, SNAP-IN, GND	Weidmüller	

Rev.	Description	Date	Rev. by	Standard	
05	For customer review	24.02.2023	GM	Date	14.10.2021
04	For customer review	17.02.2023	GM	Drawn by	KS
03	For customer review	14.02.2023	GM	Appr. by	BK

4/60185
CNP Freire
MBARI

TRIPLEX
A MacGregor company

Part List
CTD Davit

=CTD DAVIT
+X32

E-4503 - 07
Rev. 05
5 / 10

Printed: 24.02.2023 15:27

Template:

Device ID	Device	Part No.	El. No.	Qty	Unit	Description	Manufacturer	Link
-GL1..-GL4	ST-M 16 x 1.5	07928032	12 477 13	4	Pcs	CABLE GLAND, PLASTIC, SKINTOP, Ø3,5-8	Lapp	
-JB1	CPG-240	07904004		1	Pcs	JUNCTION BOX, POLYESTER, 220x120x90	Bernstein	
-RAIL1	TS 35X7.5 6.2MM HULLET	07940001	12 692 14	0.2	M	RAIL, PERFORATED, TS35 x 7,5 x 6,2mm	Weidmüller	
-TAG1	US-EMLP 60X30	07958306	12 684 08	1	Pcs	TAG, SIGN, THERMOMARK CARD, W/GLUE	Phoenix Contact	
-X1	AEB 35 SC/1	400073887	12 654 34	2	Pcs	TERMINAL BLOCK, SNAP-IN, END LOCK	Weidmüller	
-X1	AEP 2C 2.5	400069933	12 694 10	2	Pcs	TERMINAL BLOCK, SNAP-IN, END PLATE	Weidmüller	
-X1 (1,1,1-2,4,4-6)	A2C 2.5	400069931	12 654 00	8	Pcs	TERMINAL BLOCK, SNAP-IN, SINGLE	Weidmüller	

Rev.	Description	Date	Rev. by	Standard	
05	For customer review	24.02.2023	GM	Date	14.10.2021
04	For customer review	17.02.2023	GM	Drawn by	KS
03	For customer review	14.02.2023	GM	Appr. by	BK

4/60185
CNP Freire
MBARI

TRIPLEX
A MacGregor company

Part List
CTD Davit

=CTD DAVIT
+X33

E-4503 - 07
Rev. 05
6 / 10

Printed: 24.02.2023 15:27

Template:

Device ID	Device	Part No.	El. No.	Qty	Unit	Description	Manufacturer	Link
-S2	XALK178W3B140G	400208317	4322660	1	Pcs	CONTR. PUSH, EM STOP	Schneider	

Rev.	Description	Date	Rev. by	Standard	
05	For customer review	24.02.2023	GM	Date	14.10.2021
04	For customer review	17.02.2023	GM	Drawn by	KS
03	For customer review	14.02.2023	GM	Appr. by	BK

4/60185
CNP Freire
MBARI

TRIPLEX
A MacGregor company

Part List
CTD Davit

=CTD DAVIT
+Z30

E-4503 - 07
Rev. 05
7 / 10

Printed: 24.02.2023 15:27

Template:

Device ID	Device	Part No.	El. No.	Qty	Unit	Description	Manufacturer	Link
-S2	XB4BW73731B5_Mod	07961026	43 014 04	1	Pcs	CONTR. PUSH BUTTON, DOUBLE, I - 0 W/LED	Schneider	

Rev.	Description	Date	Rev. by	Standard	
05	For customer review	24.02.2023	GM	Date	14.10.2021
04	For customer review	17.02.2023	GM	Drawn by	KS
03	For customer review	14.02.2023	GM	Appr. by	BK

4/60185
CNP Freire
MBARI

TRIPLEX
A MacGregor company

Part List
CTD Davit

=CTD DAVIT
+Z31

E-4503 - 07
Rev. 05
8 / 10

Printed: 24.02.2023 15:27

Template:

Device ID	Device	Part No.	El. No.	Qty	Unit	Description	Manufacturer	Link
-B1,-B2	NBN40-L2-A2-V1	07917215		2	Pcs	SENSOR, PROX, 40X40, NO/NC, SN40, M12	Pepperl & Fuchs	
-H1	FL60 9000 850 120 M24 MB	400072975		1	Pcs	FLOODLIGHT, LED, 80W, 120V, MEDIUM BEAM	Glamox	
-Y6.1	HAWE STOP VALVE			1	Pcs	VALVE, ON/OFF	Hawe	

Rev.	Description	Date	Rev. by	Standard	
05	For customer review	24.02.2023	GM	Date	14.10.2021
04	For customer review	17.02.2023	GM	Drawn by	KS
03	For customer review	14.02.2023	GM	Appr. by	BK

4/60185
CNP Freire
MBARI

TRIPLEX
A MacGregor company

Part List
CTD Davit

=CTD DAVIT
+Z32

E-4503 - 07
Rev. 05
9 / 10

Printed: 24.02.2023 15:27

Template:

Device ID	Device	Part No.	El. No.	Qty	Unit	Description	Manufacturer	Link
-H1	853 310 55	07959005		1	Pcs	LAMP, BEACON, LED, YE, FLASH, 24V	Werma	
-S1	XALK178W3B140G	400208317	4322660	1	Pcs	CONTR. PUSH, EM STOP	Schneider	
-Y1	HAWE STOP VALVE			1	Pcs	VALVE, ON/OFF	Hawe	
-Y2..-Y4	HAWE PROP VALVE			3	Pcs	VALVE, PROPOTIONAL	Hawe	

Rev.	Description	Date	Rev. by	Standard	
05	For customer review	24.02.2023	GM	Date	14.10.2021
04	For customer review	17.02.2023	GM	Drawn by	KS
03	For customer review	14.02.2023	GM	Appr. by	BK

4/60185
CNP Freire
MBARI

TRIPLEX
A MacGregor company

Part List
CTD Davit

=CTD DAVIT
+Z33

E-4503 - 07
Rev. 05
10 / 10

Printed: 24.02.2023 15:27

Template: