DTEC Ltd.

GFMIV

Ground Fault Monitoring

And Interruption System

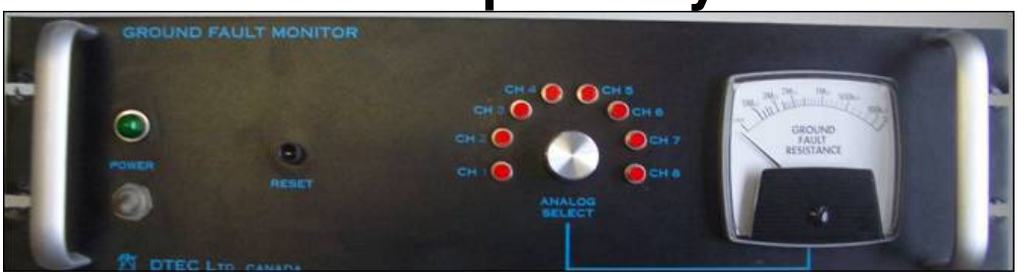

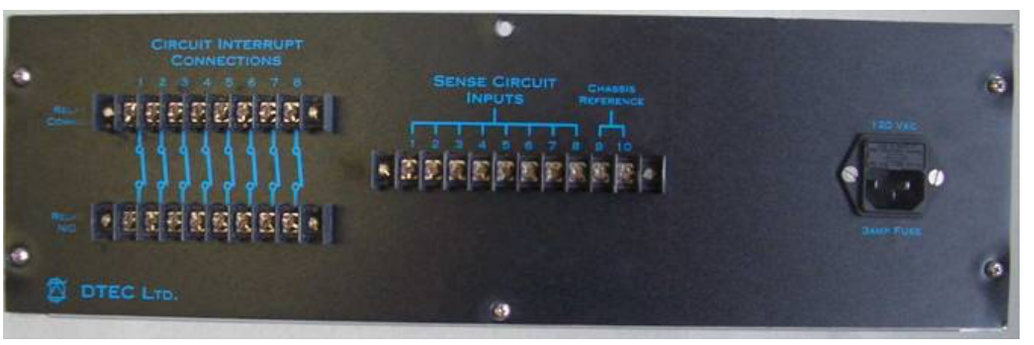

CONTENTS

1.0 Ground Fault Monitor and Interruption Manual..... 3
1.1 Introduction:..... 3
1.2 Specifications:..... 3
2.0 Installing GFMIV..... 4
2.1 General Information..... 4
2.2 Rear Panel Connections:..... 4
2.2.1 Relay Common and Normally Closed Terminals:..... 4
2.2.2 Sense Circuit Terminals:..... 4
2.2.3 Chassis Reference:..... 5
2.2.4 Power Cord Connection:..... 5
2.3 General Operation and Front Panel Description:..... 5
2.3.1 Power Switch and Light..... 5
2.3.2 Reset Button:..... 5
2.3.3 Channel Indication Lights:..... 6
2.3.4 Channel Select Rotary Switch:..... 6
2.3.5 Panel Meter:..... 6
2.4 Sense Blocks:..... 6

3.0 Panel Drawings..... 7
Fig. 1. Rear Panel Connections..... 7
Fig. 2. Front Panel..... 7
Appendix A Circuit Drawings..... 7
Fig. 3. Sense Block Wiring..... 8
Fig. 4. System Block Diagram..... 9
Fig. 5. Ground Fault Monitor Wiring Diagram..... 10
Drawing Following Page:.....
Fig. 6. Ground Fault Relay Board Schematic..... 11
Fig. 7. Ground Fault Monitoring Board GA..... 12
Fig. 8. Ground Fault Monitoring Board Schamatic..... 13
Fig. 9. Ground Fault Monitoring Termination Board Schematic..... 14
Appendix B GFMIV Setup Procedures..... 15
Appendix C Trouble-Shooting..... 18
Power Failure..... 18
Incorrect LED Operation..... 18
Incorrect Analog Meter Operation..... 19
Override Condition..... 19
Appendix C Optional DC Relay Outputs..... 20

1.0 Ground Fault Monitor and Interruption Manual

1.1 Introduction:

This document contains setup, wiring diagrams and an overview of the operation for the GFMIV Ground Fault Monitoring and Interruption System. The ground fault system is intended to protect equipment and people from failure or injury. The system measures and indicates the amount of "leakage" résistance to the reference chassis ground. The system also provides the interruption of a faulty circuit by means of interrupting a path to a contactor or switching device.

1.2 Specifications:

Mechanical:

Dimensions: 19" wide x 5.22" height x 18" deep.

Weight: 12 lbs.

Electrical:

Power input: 120 Vac @ 60 Hz @ 1amps

Fuse: 250 Vac @ 3amps AGC

Number of circuits: 8 individual sense circuits/8 individual relay contacts

Monitored circuits: 5 to 1000 Vdc and/or 24 to 3000 Vac 1 or 3 phase @ 60 Hz
(Higher voltages available)

Interruption point: Factory set 500 Kohms

Output Relay: 240 Vac @ 10 amps Note: No DC is allowed to be switched
(optional switching to 480VAC @ 25Amps)

Optional Solid State DC Relay Output: 100VDC 1Amp

2.0 Installing GFMIV

2.1 General Information

Installation of the ground fault monitoring system requires the connection of the power cord, chassis reference, relay output circuits and sense inputs to the correct sense blocks. These sense blocks are different for Single phase/DC circuits and 3 phase circuits. The sense blocks are installed between the monitored circuit and the sense inputs. The typical connections for these blocks are in Appendix A. The relay outputs are triac switches that open upon a ground fault condition. Typical installation is to connect the coil of a contactor through this relay and hence be interrupted and disconnected if a ground fault condition arises.

2.2 Rear Panel Connections:

The rear panel has connections for 8 - Relay Common Terminals, 8 - Relay Normally Closed Terminals, 8 - Sense Circuit Terminals, 2 - Chassis Reference Terminals and a 120 Vac power cord. The block diagram and examples for the rear panel wiring is located in Appendix A. There can also be connections fro the Optional DC Relay contacts.

2.2.1 Relay Common and Normally Closed Terminals:

The ground fault system can monitor up to 8 independent AC and/or DC circuits. Each circuit has a solid state relay with a triac output that can interrupt the corresponding channel if a ground fault condition appears. Typically the Relay Common will connect to a power source (line) that enables a contactor or switching device. The Normally Closed will connect to one side of the coil or switching device. If no ground fault condition is present the path will be completed by the solid state relay closing. If a ground fault condition is present the path will be interrupted by the solid state relay opening. See wiring example in the drawing appendix A. The solid state relays can only switch off AC circuits.

2.2.2 Sense Circuit Terminals:

The sense circuit inputs should be connected directly to the sense blocks via a 22 to 20 gauge wire. The sense blocks are then connected to the monitored circuit. See appendix A for connection to circuits. Using Twisted pair wire shielded to chassis ground will reduce the chances of an erroneous GFI trip.

2.2.3 Chassis Reference:

The chassis reference input is essential for proper operation of the ground fault system and must be connected to the system chassis ground or chassis ground to be referenced. Typically this is the chassis ground of the hull, umbilical, rack etc. The 2 terminals are tied together inside the unit so connection of either terminal will be correct. **If this terminal is not connected to chassis ground the ground fault system will not function correctly.** This terminal is not internally tied to the chassis ground connection on the power cord even though most likely these are the same. This is done to allow the user to choose the least electrically noisy contact to use for the chassis ground connection.

2.2.4 Power Cord Connection:

The power plug connection is a standard power supply cord set. The input power of 120 Vac 60 Hz @ 1 amps must be stable and protected if possible for proper use. The power cord connector contains an integrated pull-out fuse holder with fuse and a spare fuse. This fuse rated for 3 Amps and is the only fused associated with the system.

2.3 General Operation and Front Panel Description:

The operation of this ground fault system is to display and interrupt an electrical circuit if there is a resistance of 500 Kohms between a conductor and chassis ground. The channel with the ground fault will illuminate a Light on the front panel, and, with that channel selected by the rotary switch the resistance will be indicated on the panel meter. The meter can only indicate one channel at a time. Use the selector to choose the channel to have displayed by the panel meter.
The front panel contains the power switch and light, reset button, channel indication lights, rotary switch for analog channel select, and analog panel meter.

2.3.1 Power Switch and Light

The power switch and light indicate whether the unit has power to it. It is critical that the 120 Vac be stable and constant as fluctuations in this level could cause the unit produce incorrect readings. If the light does not illuminate after throwing the switch check to ensure that the power cord is plugged in and the fuse is not blown or incorrectly installed.

2.3.2 Reset Button:

The reset button function is to reset the solid state relay board to the normally closed position after it has been interrupted. If the ground fault that caused the interrupt has been repaired or corrected the reset button is depressed to resume proper operation. While the reset button is being depressed it is possible to "override" the relay output and force it closed. Operators must be aware of this state as you could override a interrupted circuit which still has a Ground Fault Condition.

2.3.3 Channel Indication Lights:

An illuminated red light indicates that the ground fault level of that channel has reached 500 Kohms or below and the circuit has been interrupted. The channel will stay interrupted until the reset button is depressed and the light goes off. If the light does not go off after the reset button has been depressed then the channel still has a ground fault present and should be checked more thoroughly.

2.3.4 Channel Select Rotary Switch:

The rotary switch selects which analog value is displayed on the analog panel meter. The switch can be rotated to any of the 8 sensed circuits and the corresponding resistance value of that circuit will be displayed on the panel meter.

2.3.5 Panel Meter:

The panel meter displays the resistance value of the circuit selected.

2.4 Sense Blocks:

A sense block is required for each channel to be monitored and sense blocks may vary from circuit to circuit due to the type of circuit to be monitored. It is essential that the proper sense blocks are used in each circuit or incorrect and faulty readings could result. The input resistance the sense circuit requires for proper measurements is 600 Kohm, therefore; in a DC or 1 phase AC circuit the 2 resistors must be 1M2. In a 3 phase AC circuit the 3 resistors must be 1M8. For monitored circuits up to 1000 volts use 1/2 watt resistors, for monitored circuits up to 2000 volts use 1/2 watt resistors and for monitored circuits up to 3000 volts use 1 watt resistors. Try to keep the sense blocks close to the high voltage and use 22 to 16 gauge wire for the sense wire to the GFM unit. This keeps the high voltage within the designated area. For connection examples see appendix A. The resistors must be appropriately voltage sized.

3.0 Panel Drawings

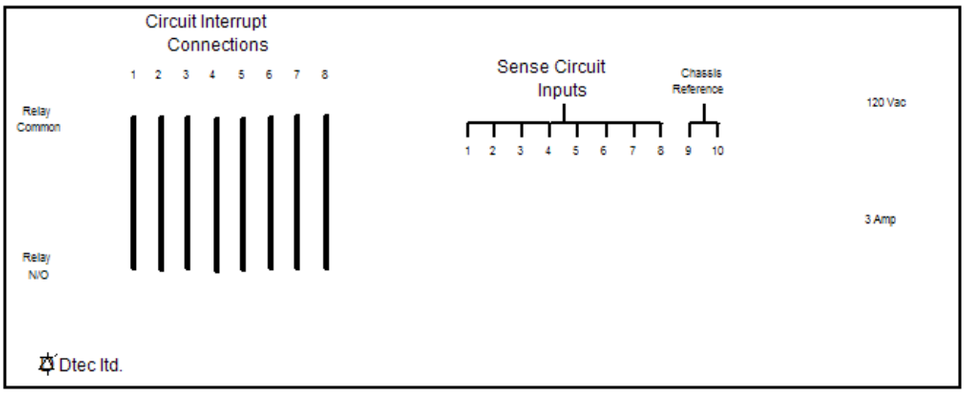

Fig. 1. Rear Panel Connections

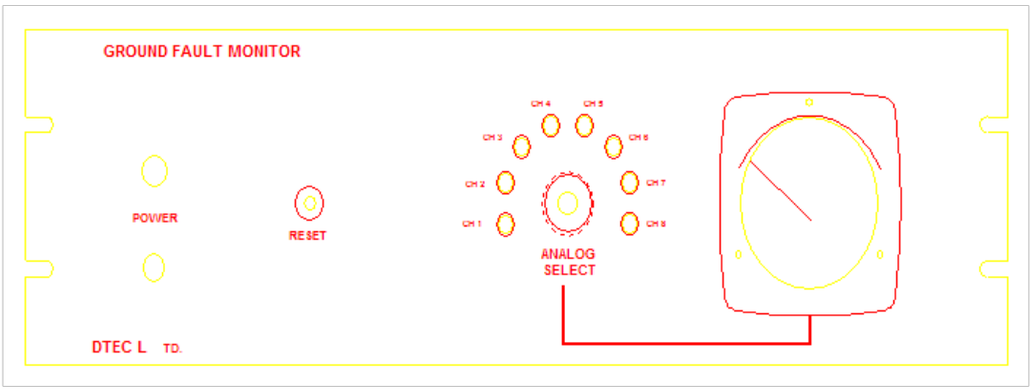

Fig. 2. Front Panel

Appendix A Circuit Drawings

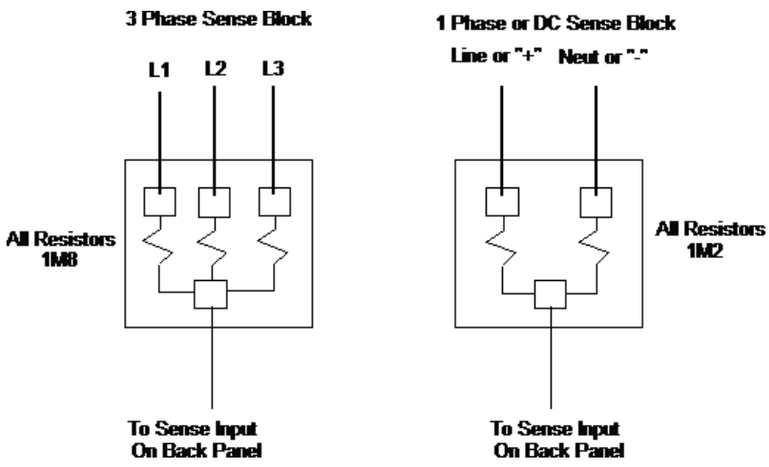

Fig. 3. Sense Block Wiring

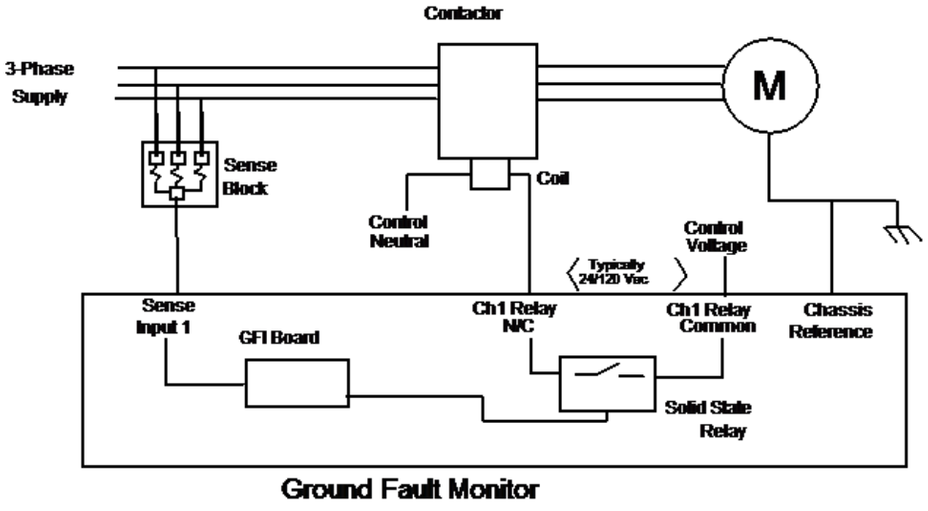

Fig. 4. System Block Diagram

Fig. 5. Ground Fault Monitor Wiring Diagram

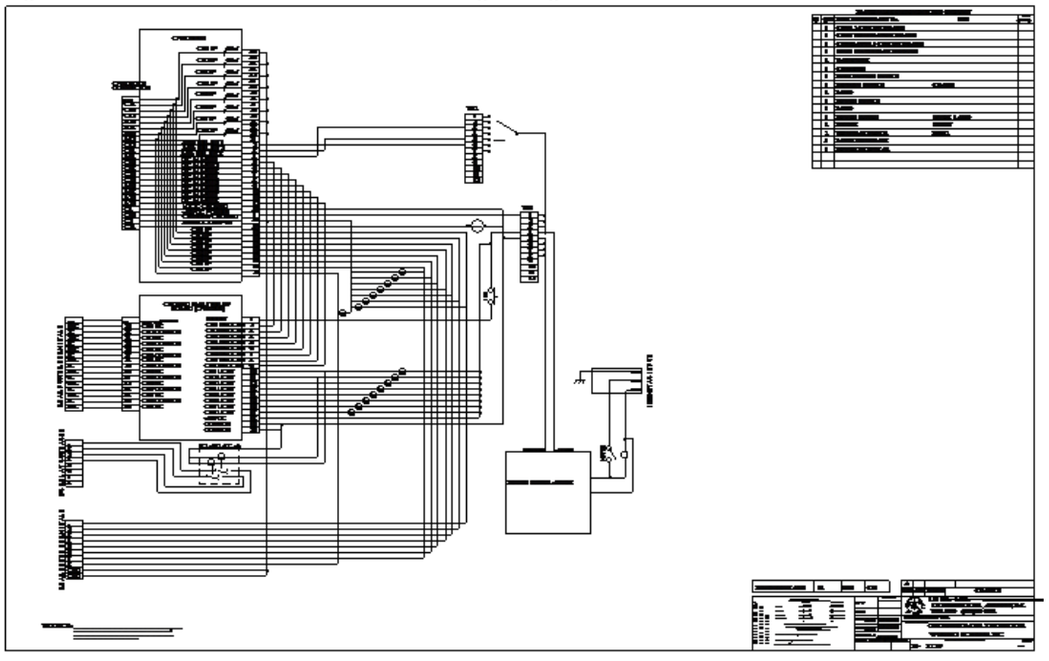

Fig. 6. Ground Fault Relay Board Schematic

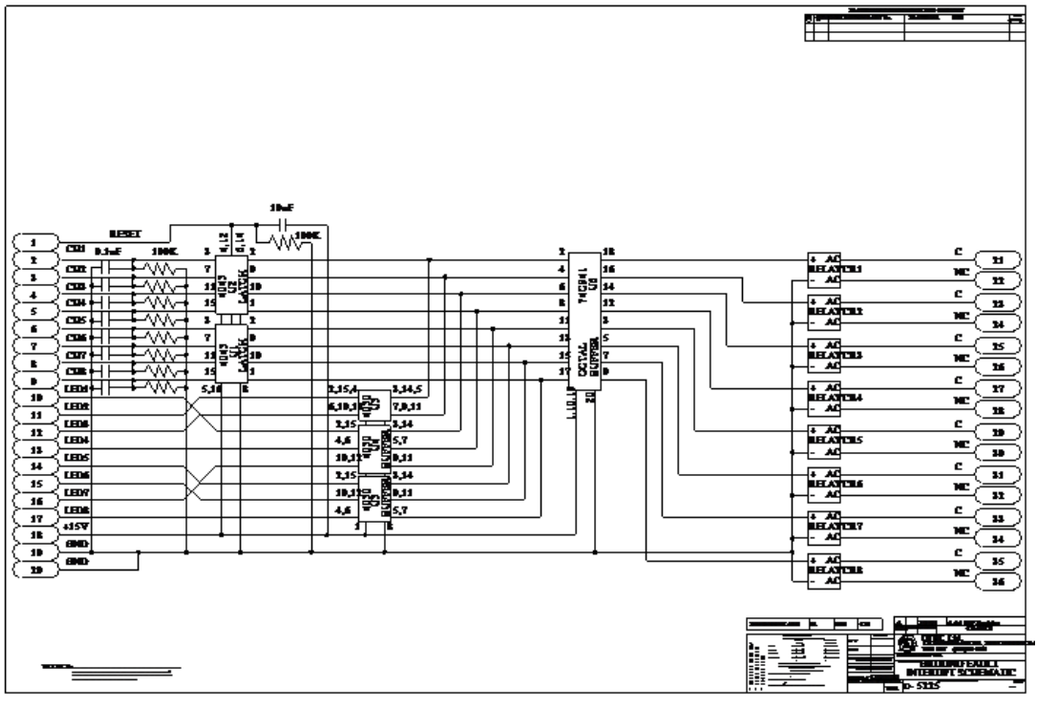

Fig. 7. Ground Fault Monitoring Board GA

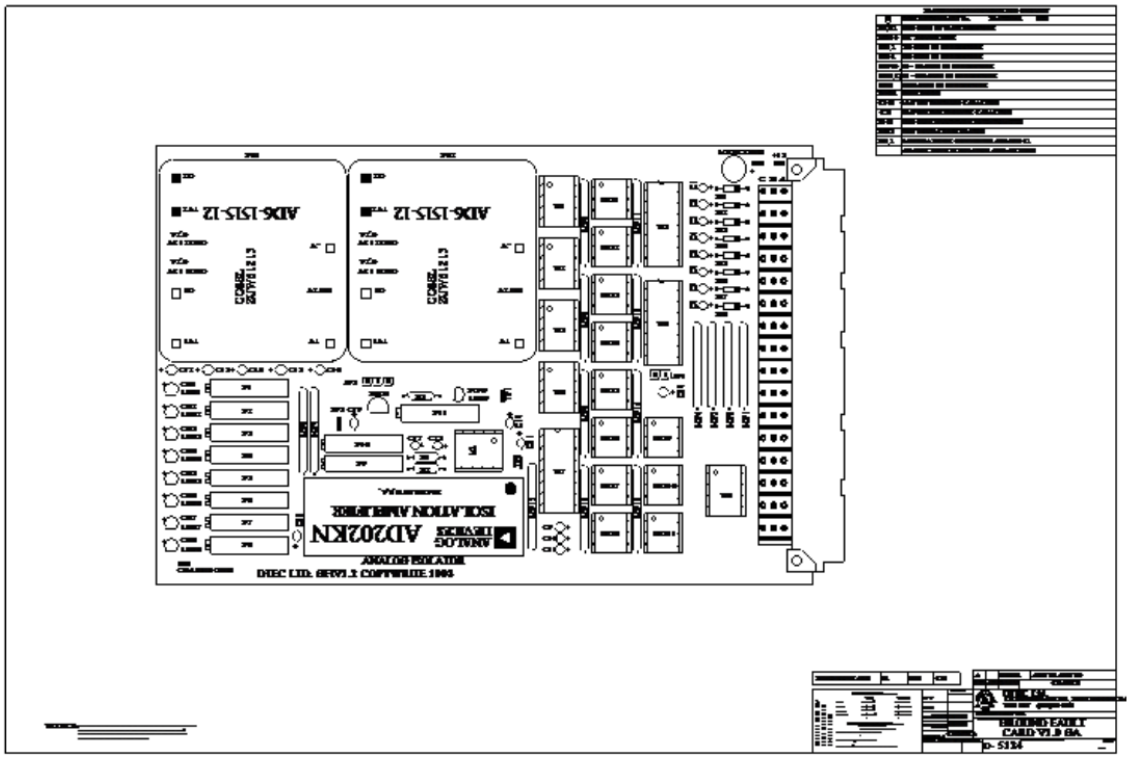

Fig. 8. Ground Fault Monitoring Board Schamatic

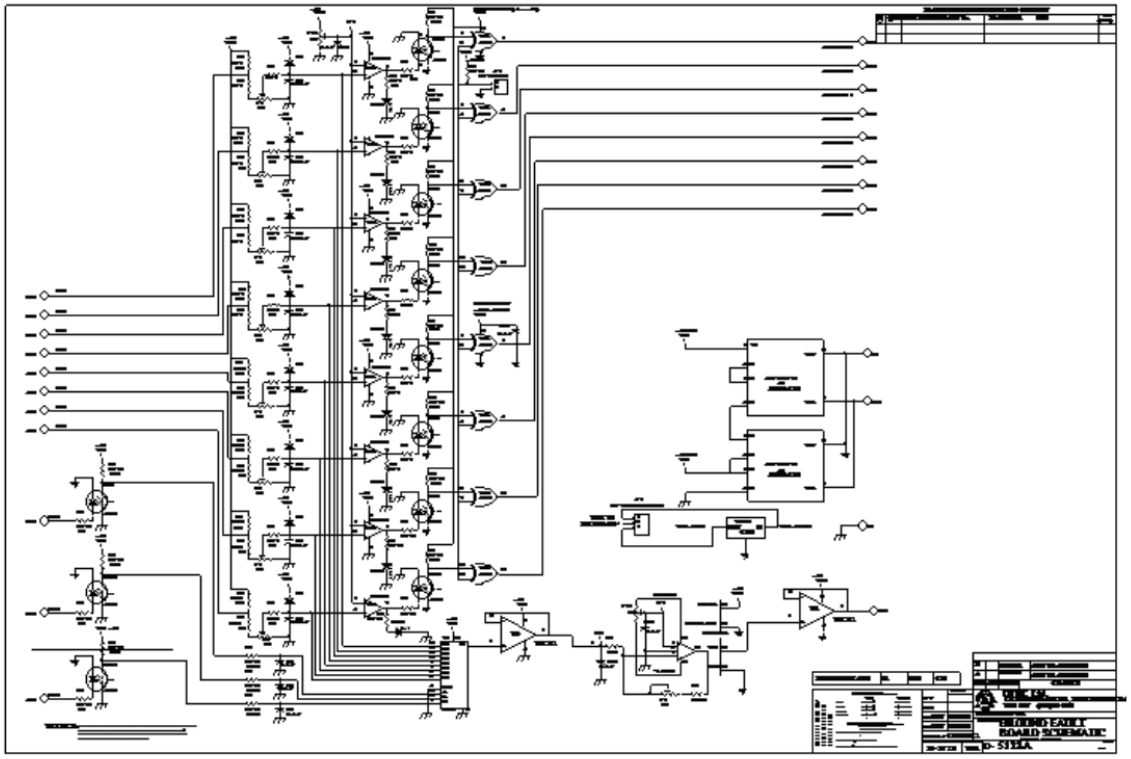

Fig. 9. Ground Fault Monitoring Termination Board Schematic

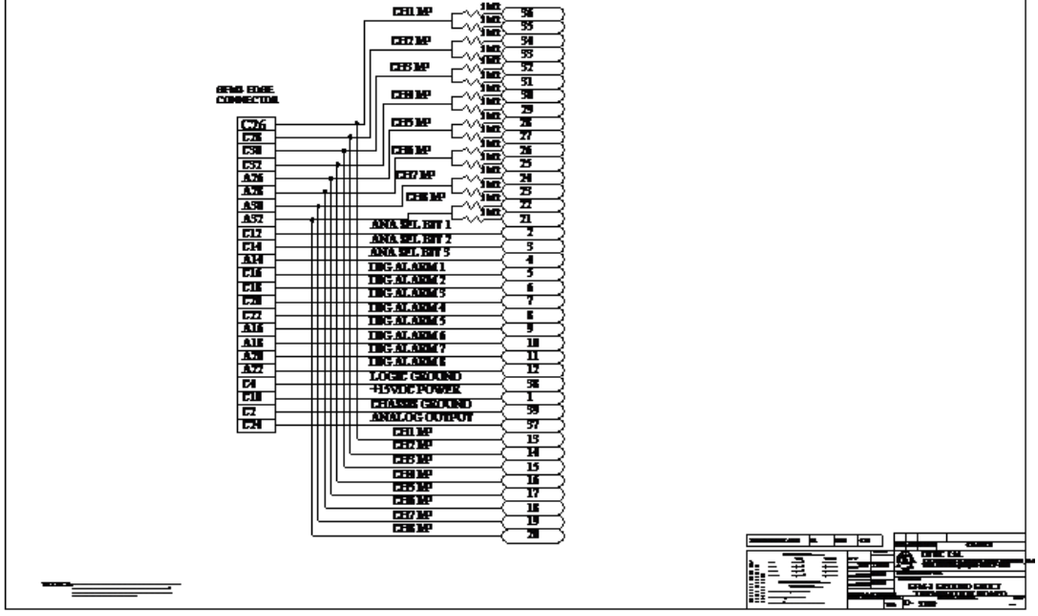

Appendix B GFMIV Setup Procedures

Circuit description:

The DTEC Ltd. GFMIV ground fault monitoring board places a high impedance (~3M ohms) voltage source of +25.6 VDC, with respect to chassis ground, onto eight circuits. It then measures the drop across sensing resistors. These resistors are a combination of 2 or 3 resistors making 600K Ohms. If the circuit being monitored is 3 phase the resistors are 1M8. If the circuit being monitored is single phase or DC the 2 resistors are 1M2. If a ground fault condition is developing this +25.6 vdc level decreases. If +25.6 VDC is present (with respect to chassis ground) on the monitored channel there is no ground fault. As the resistance from the circuit to chassis ground decreases this voltage drops, this produces an increasing analog output voltage for that channel and in the event the resistance drops below 500K Ohms the digital output for that channel goes active.

There are 5 sections to the circuit board:

Power Supply - The 2 - DC-DC converters receive a logic +15 vdc and output +/- 15 vdc. These work in series to create a +60 vdc circuit and a single +15 vdc with respect to chassis ground.

Voltage Comparitor - This section compares the trip level (set by Pot 11 and measured on test point 1) to the measured sense input level. A Voltage of 6.00VDC at test point 1 corresponds to a ground fault resistance of 500K Ohms.

Digital Output - This section triggers the digital output to be enabled. This level is either active high (+5 or +15c vdc) or active low (0 vdc). The active high/low is selectable by Jumper 1 (JP1). No matter what the state of JP1 the LEDs on the board will only illuminate if the ground fault trip level is reached. JP1 only affects the outputs connections to the board.

Analog Amplifier/Isolator - This section outputs a single analog value which is connected to one of the eight channels as selected by the bit selects. (C12, C14, and A14). The analog is isolated from chassis ground (analog output referenced to power supply ground). The analog voltage should range from +0.00 to +5.00 vdc. 0.00VDC is a high resistance from the selected channel to chassis ground (normal condition), 5.00VDC is a short from the selected channel to chassis ground.

Bit Select Input - This is the section which selects the channel that will be routed through the analog isolator and is sent to either the Ground Fault Meter (19" rack mount system) or the telemetry system (stand alone board). The following is a table for the bit select levels and the corresponding channel to be routed to the analog output.

	Bit Select Input Terminal Level			
Monitored	C12 (lsb)	C14	A14 (msb)	Edge Connector
	2	3	4	Termination Card
1	1	1	1	
2	0	1	1	
3	1	0	1	
4	0	0	1	
5	1	1	0	
6	0	1	0	
7	1	0	0	
8	0	0	0	

note

lsb - Least Significant Bit
msb - Most Significant Bit
0 - Logic Ground
1 - Logic +15 vdc

Board Setup

The ground fault board is set up at the factory to measure ground faults ranging from 100 M ohms to 0 ohms. For further adjustments or re-tuning follow these instructions.

No in circuit wiring should be connected to the sense lines only the test wiring.

Connections for the board:

Edge Connector	Termination Board Connection	Description
C2	39	Chassis Ground
C4	38	Logic Ground
C10	1	Logic +15 vdc
C12	2	Bit Select 1 (lsb)
C14	3	Bit Select 2
A14	4	Bit Select 3 (msb)
C16	5	Digital Output Alarm For Channel 1
C18	6	Digital Output Alarm For Channel 2
C20	7	Digital Output Alarm For Channel 3
C22	8	Digital Output Alarm For Channel 4
A16	9	Digital Output Alarm For Channel 5
A18	10	Digital Output Alarm For Channel 6
A20	11	Digital Output Alarm For Channel 7
A22	12	Digital Output Alarm For Channel 8
C24	37	Analog Output
C26	13	Channel 1 Input Sense Line With External Resistors
C28	14	Channel 2 Input Sense Line With External Resistors
C30	15	Channel 3 Input Sense Line With External Resistors
C32	16	Channel 4 Input Sense Line With External Resistors
A26	17	Channel 5 Input Sense Line With External Resistors
A28	18	Channel 6 Input Sense Line With External Resistors
A30	19	Channel 7 Input Sense Line With External Resistors
A32	20	Channel 8 Input Sense Line With External Resistors

** Note you must use external sense resistors when using inputs 13 to 20

Test points used on the board:

- Input logic voltage level point and ground point found in the rear left corner.
- Chassis ground point found near LED 8
- TP1 found near power LED9 and C18
- TP3 found near C19 and P10

Setup

Tune Pot 11 (P11) so the voltage at Test Point 1 (TP1) is +6.00 vdc with respect to chassis ground. This calibrates the digital output trip level to activate at ~500K ohms.

Tune Pots 1 through 8 (P1 to P8) so the voltage at the junction of the diode and capacitor is +10.00 vdc with respect to chassis ground. For example to set up channel 1:

- place the "+" ve probe of multi-meter on the junction of D1 (diode 1) and C1 (capacitor 1) and the "-" ve on the chassis ground.
- tune P1 until the multi-meter reads +10.00 vdc this happens near the very end of the pot.

Eg. To setup channel 4:

- place the "+" ve probe of multi-meter on the junction of D4 (diode 4) and C4 (capacitor 4) and the "-" ve on the chassis ground.
- tune P4 until the multi-meter reads +10.00 vdc this happens near the very end of the pot.

Tune Pot 9 (P9) so with a 5M0 ground fault (with the sense resistors in the circuit) the analog output value is +0.620 vdc with respect to logic ground.

This only needs to be done once because its the same for all channels.

Eg.
- place a wire on terminal 13
- place a 5M0 ohm resistor between chassis ground 39 and channel 1 input sense lines 35 or 36 (they should be tied together).
- place the "+" ve probe of the multi-meter on the analog output 37.
- place the "-" ve probe on the logic ground point or 38.
- tune P9 until the meter reads +0.620 vdc

Tune Pot 10 (P10) so with a 0 ohm (short to chassis ground with the sense resistor in the circuit) the analog output reads +5.00 vdc.

Eg.
- place a wire on terminal 13
- place a wire between chassis ground 39 and channel 1 input sense line 13
- place the "+" ve probe of the multi-meter on the analog output 37.
- place the "-" ve probe on the logic ground point or 38.
- tune P9 until the meter reads +5.00 vdc

Selectable features:

Jumper 1 JP1 - This selects the digital output from either active high or active low level.
Jumper installed is active low. Jumper removed is active high.
+5 vdc or +12 vdc - This is a hard wire jumper - JP3 - found in front of P11. If the jumper is between the center and left points the digital output level is +5 vdc. If the wire jumper is between the center and the right points the digital output is +12 vdc.

Appendix C Trouble-Shooting

Power Failure

check power cord into the unit and into the wall.
check fuse in power cord connector in back of unit.
check wall breaker.
check power switch and light for proper operation.
check to ensure that internal power supply is set to 15 Vdc

Incorrect LED Operation

check to ensure that the chassis reference terminal on the back panel is connected to the chassis ground.
check to ensure that the sense blocks are connected properly and the correct sense block is being used for each monitored circuit.
check all connections for the LEDs using the GFM schematic.

Incorrect Analog Meter Operation

check that the power supply is set to 15 Vdc.
check to ensure that the sense blocks are connected properly and the correct sense block is being used for each monitored circuit.
check that the channel select switch is working properly.
check the diodes that are used to the generates the 3 bits for the channel select for the ground fault board.
check all connections to the analog meter using the GFIWIRE schematic.

Override Condition

an override condition can be caused by depressing and maintaining the reset switch. This is not recommended as serious harm may result to equipment and/or humans.

Please call DTEC for support if the above information doesn't correct the problem.

Appendix C Optional DC Relay Outputs

Optionally there are DC solid state relays which are installed to compliment the normally installed normally closed 25-240VAC relays. These relays (both the optional DC and usual AC) are used to interrupt the current through of the users power control contactors upon detection of a ground fault.
Nominally the users equipment is controlled by AC driven contactor coils. In the event that the user has DC coils and DC control system the optional solid state relays must be used to interrupt these circuits. The DC relays are good to 100VDC at 1Amp. See the GFM wiring diagram for detailed hook up.