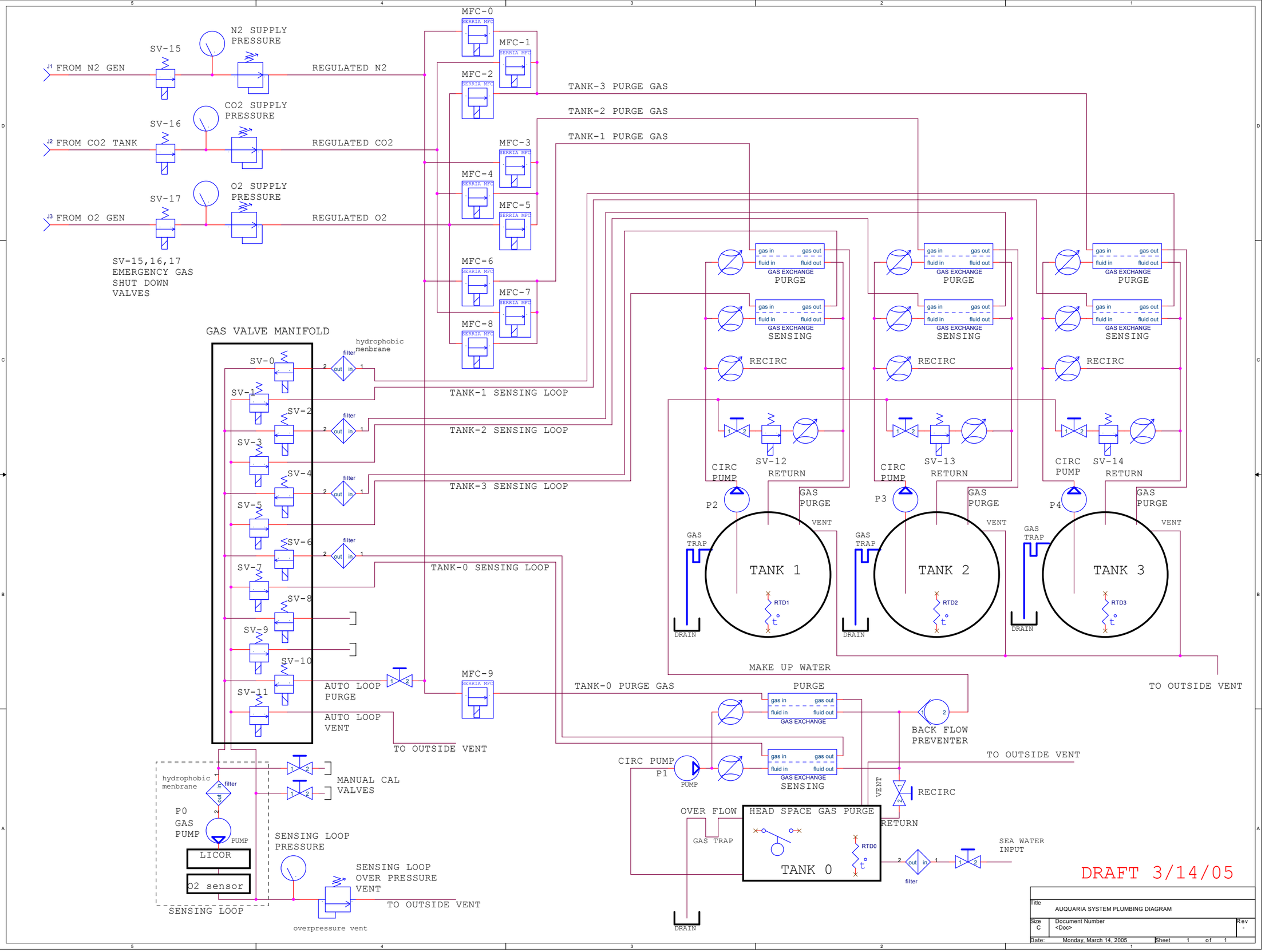
J1 FROM N2 GEN
SV-15
N2 SUPPLY PRESSURE
REGULATED N2
J2 FROM CO2 TANK
SV-16
CO2 SUPPLY PRESSURE
REGULATED CO2
J3 FROM O2 GEN
SV-17
O2 SUPPLY PRESSURE
REGULATED O2
SV-15,16,17 EMERGENCY GAS SHUT DOWN VALVES
MFC-0
MFC-1
MFC-2
MFC-3
MFC-4
MFC-5
MFC-6
MFC-7
MFC-8
MFC-9
TANK-3 PURGE GAS
TANK-2 PURGE GAS
TANK-1 PURGE GAS
GAS VALVE MANIFOLD
SV-0
SV-1
SV-2
SV-3
SV-4
SV-5
SV-6
SV-7
SV-8
SV-9
SV-10
SV-11
hydrophobic menbrane
filter
TANK-1 SENSING LOOP
TANK-2 SENSING LOOP
TANK-3 SENSING LOOP
TANK-0 SENSING LOOP
AUTO LOOP PURGE
AUTO LOOP VENT
TO OUTSIDE VENT
MANUAL CAL VALVES
P0 GAS PUMP
PUMP
LICOR
O2 sensor
SENSING LOOP
SENSING LOOP PRESSURE
SENSING LOOP OVER PRESSURE VENT
overpressure vent
gas in
gas out
fluid in
fluid out
GAS EXCHANGE
PURGE
SENSING
RECIRC
CIRC PUMP
SV-12
SV-13
SV-14
RETURN
P2
P3
P4
GAS PURGE
VENT
GAS TRAP
DRAIN
TANK 1
TANK 2
TANK 3
RTD1
RTD2
RTD3
MAKE UP WATER
TANK-0 PURGE GAS
BACK FLOW PREVENTER
CIRC PUMP
P1
OVER FLOW
HEAD SPACE GAS PURGE
TANK 0
RTD0
SEA WATER INPUT
DRAFT 3/14/05
Title
AUQUARIA SYSTEM PLUMBING DIAGRAM
Size C
Document Number
<Doc>
Rev -
Date: Monday, March 14, 2005
Sheet 1 of 1