Buoyancy engine hydraulics

Gene Massion
MBARI
831 7751922
magene@mbari.org

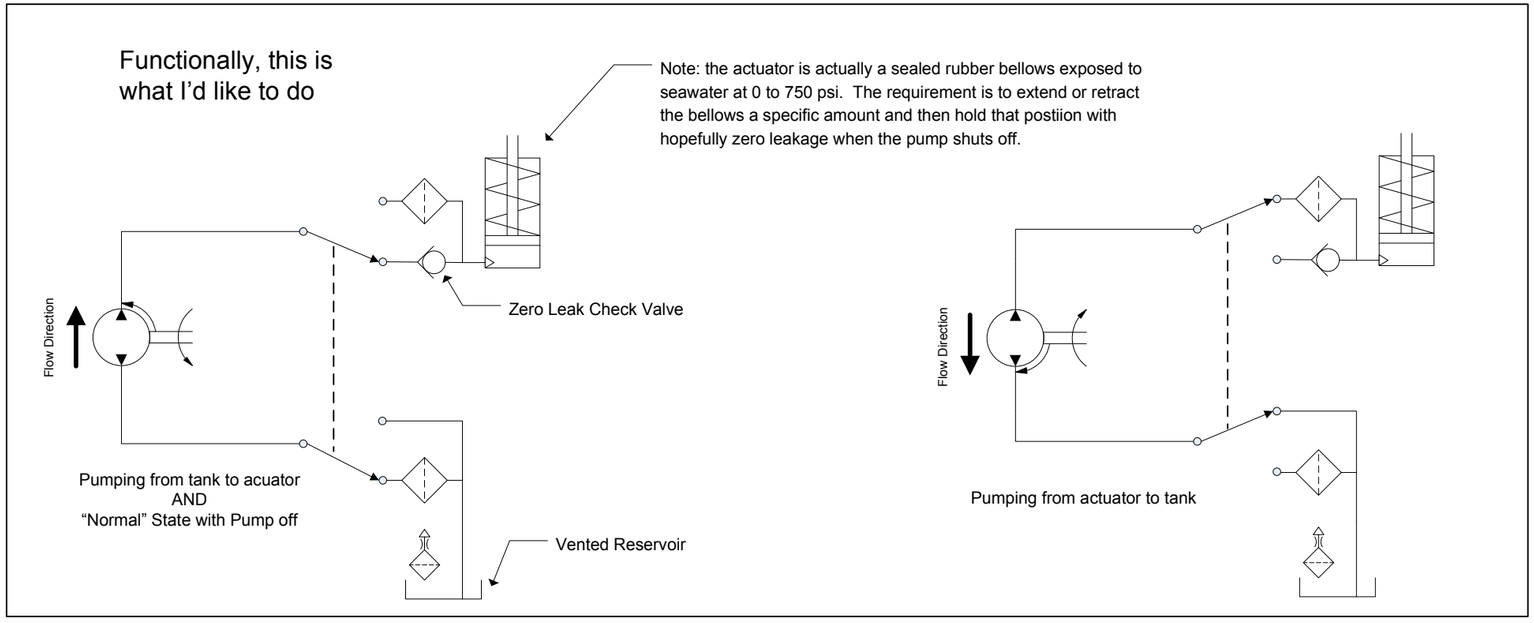

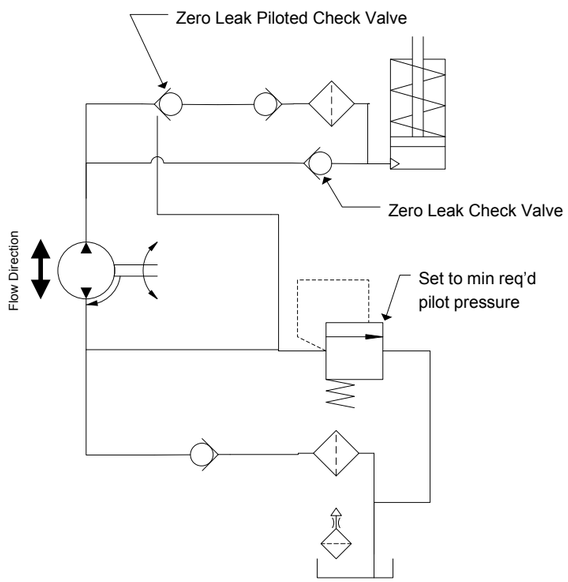

This is one hydraulic circuit that I think works. The system is battery powered and reducing the required pilot pressure saves significant power. Finding a zero leak piloted check valve with a high pilot ratio is the challenge. I'm open to other suggestions.