REV.	DATE	ZONE	DESCRIPTION	AUTH	DWG	CHK

7/16-20 O-RING BOSS SEAL
PER SAE J1926
IMPORTANT:
IF ENDCAP IS ALUMINUM THIS
PORT NEED TO BE A
9/16-18 O-RING BOSS SEAL
PER SAE J1926

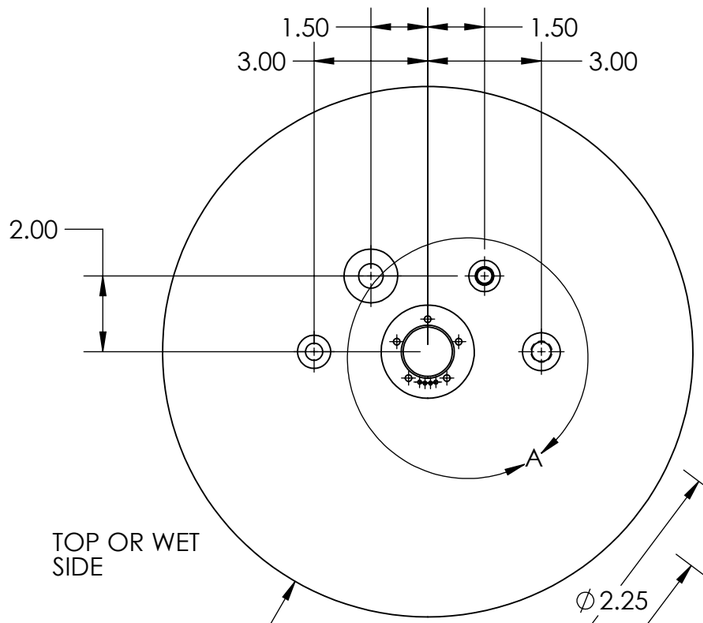

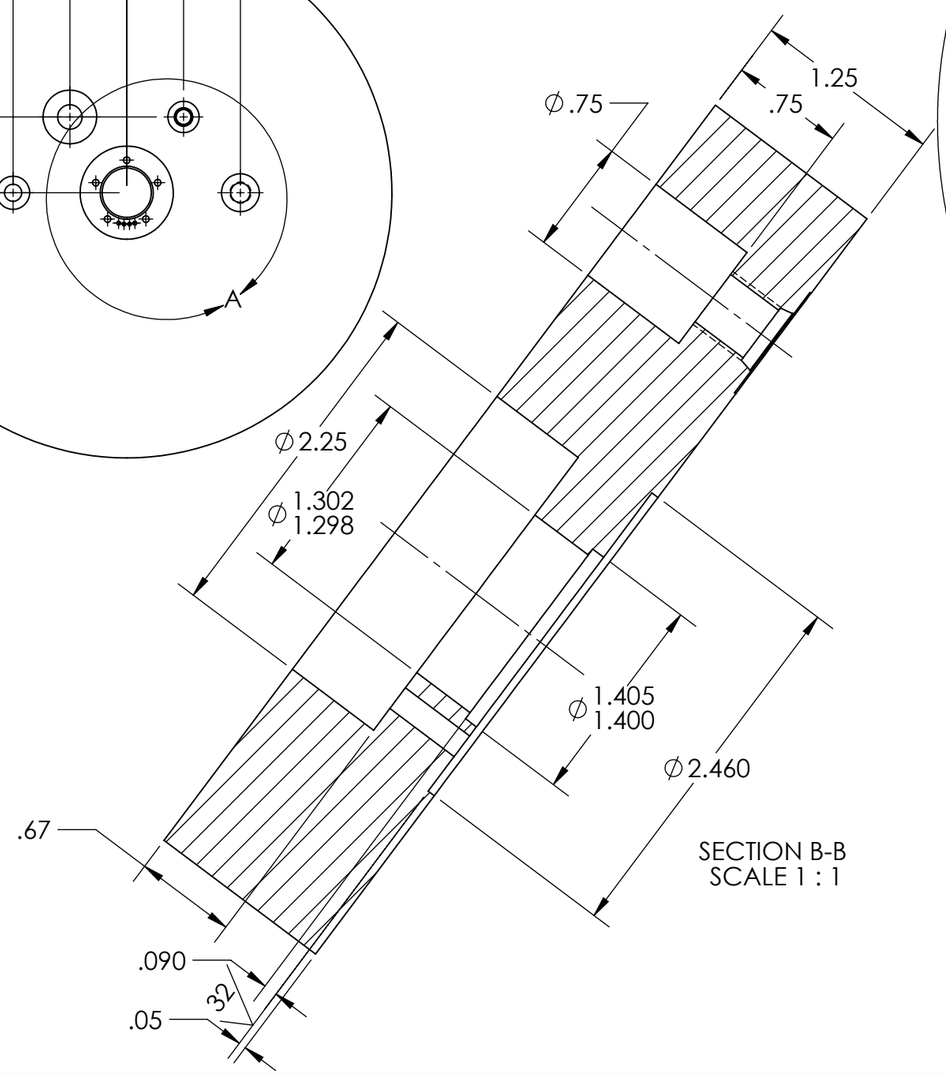

SECTION B-B
SCALE 1 : 1

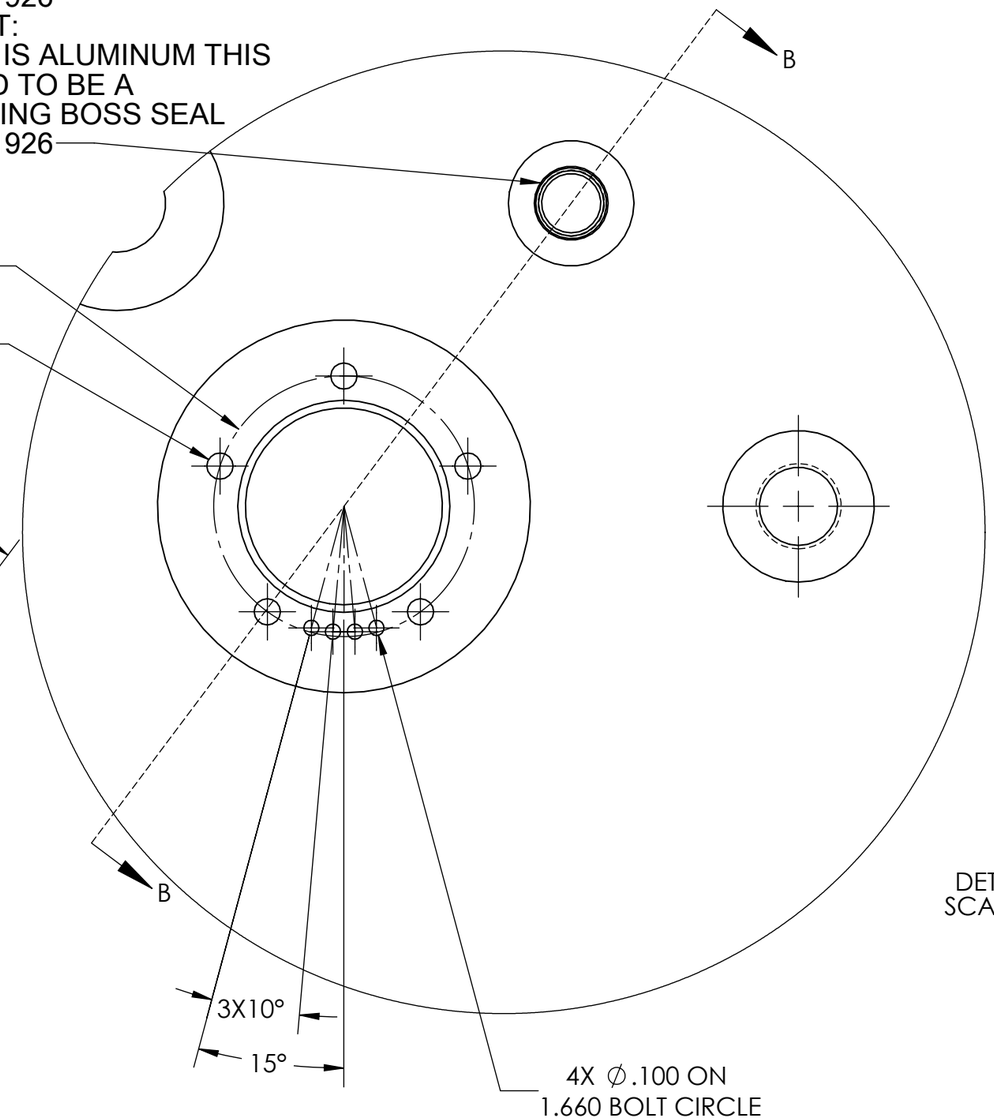

DETAIL A
SCALE 1 : 1

UNLESS OTHERWISE SPECIFIED:		NAME	DATE
DIMENSIONS ARE IN INCHES TOLERANCES: FRACTIONAL ±1/x ANGULAR: ± 0.5° BEND ± .X ± .05 TYP RAD .01 .XX ± .01 .XXX ± .003 MACHINED SURFACES	DRAWN	MT	8/1/12
INTERPRET GEOMETRIC TOLERANCING PER: ANSI Y14.5M - 1994	COMMENTS: **DEBURR AND BREAK SHARP EDGES**		
MATERIAL PVC			
FINISH	Old Part/Draw Info /		
DO NOT SCALE DRAWING			

PROPRIETARY AND CONFIDENTIAL
THE INFORMATION CONTAINED IN THIS DRAWING IS THE SOLE PROPERTY OF SEA-BIRD ELECTRONICS, INC. ANY REPRODUCTION IN PART OR AS A WHOLE WITHOUT THE WRITTEN PERMISSION OF SEA-BIRD ELECTRONICS, INC. IS PROHIBITED.

SEA-BIRD ELECTRONICS, INC.
13431 NE 20th Street, Bellevue, WA 98005
425-643-9866

TITLE: MBARI BIO/GEO END CAP

PART NO. MBARI BIO GEO EC

SIZE **B** DWG. NO. MBARI BIO GEO EC

SCALE: 1:4 SHEET 1 OF 1