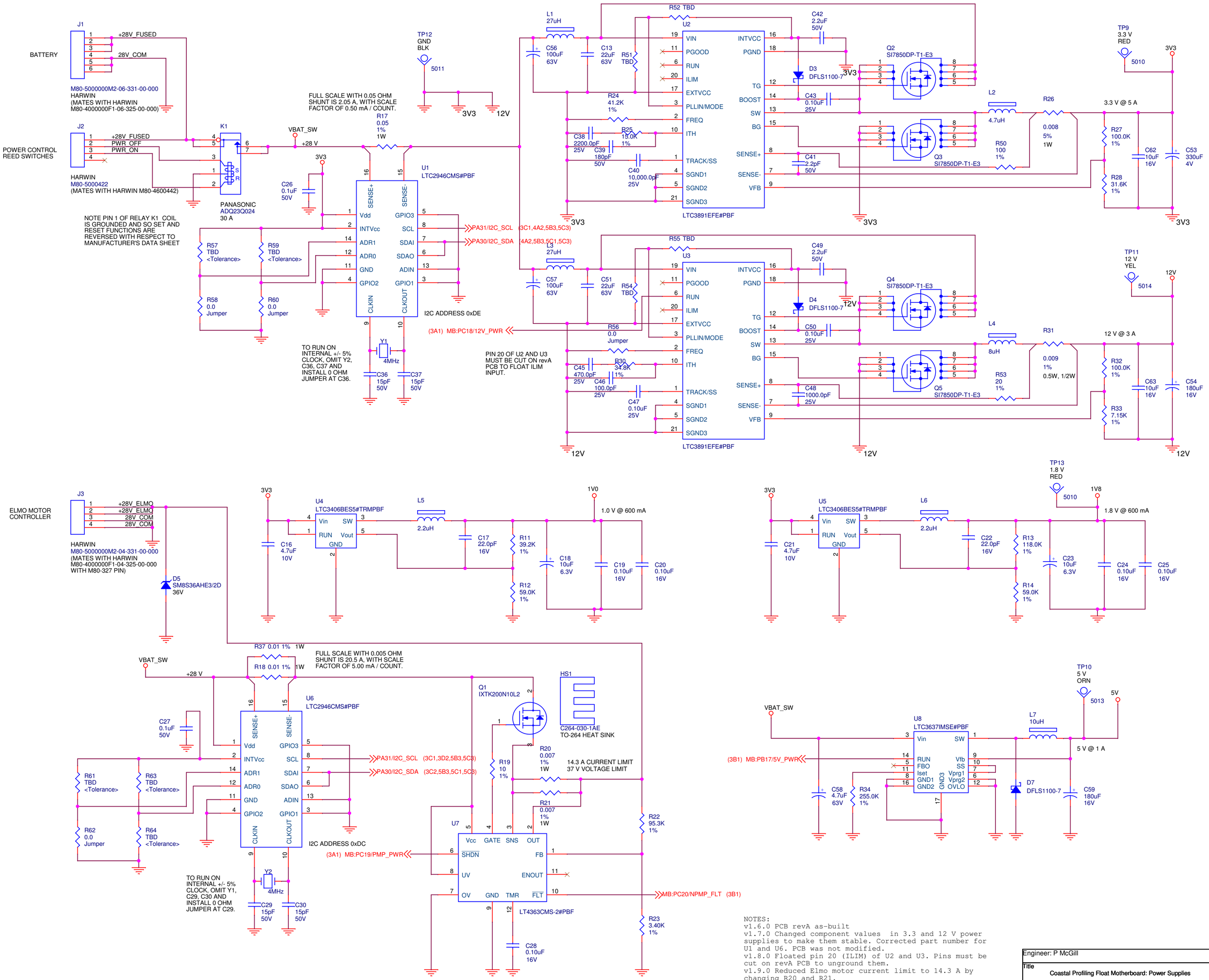

NOTES:
v1.6.0 PCB revA as-built
v1.7.0 Changed component values in 3.3 and 12 V power supplies to make them stable. Corrected part number for U1 and U6. PCB was not modified.
v1.8.0 Floated pin 20 (ILIM) of U2 and U3. Pins must be cut on revA PCB to unground them.
v1.9.0 Reduced Elmo motor current limit to 14.3 A by changing R20 and R21.

Engineer: P McGill			
Title: Coastal Profiling Float Motherboard: Power Supplies			
Size: C	Document Number: 11021161		Rev: 1.9.0
Date: Wednesday, April 26, 2017	Sheet 2 of 3		