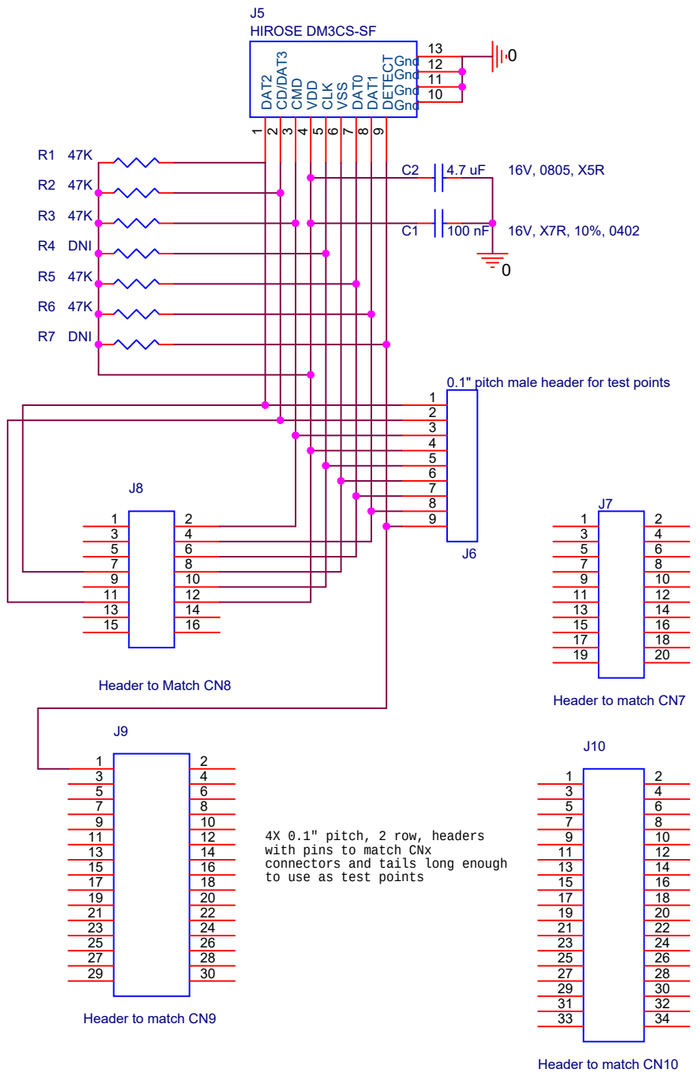

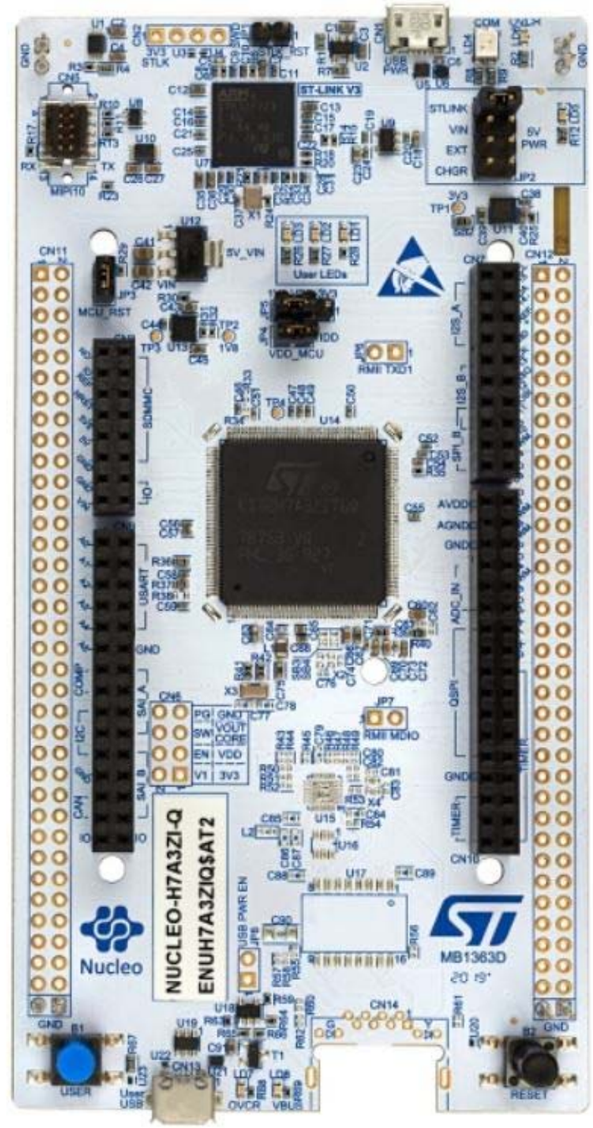

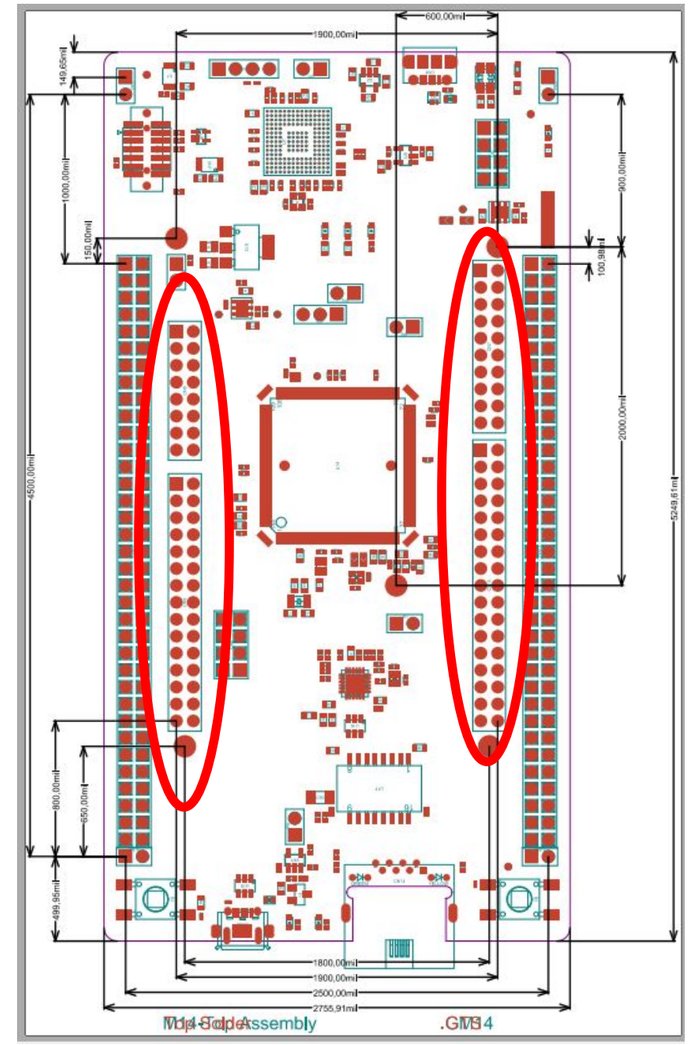

Title <Title>		
Size B	Document Number <Doc>	Rev <RevCode>
Date: Tuesday, August 10, 2021	Sheet 1 of 1	