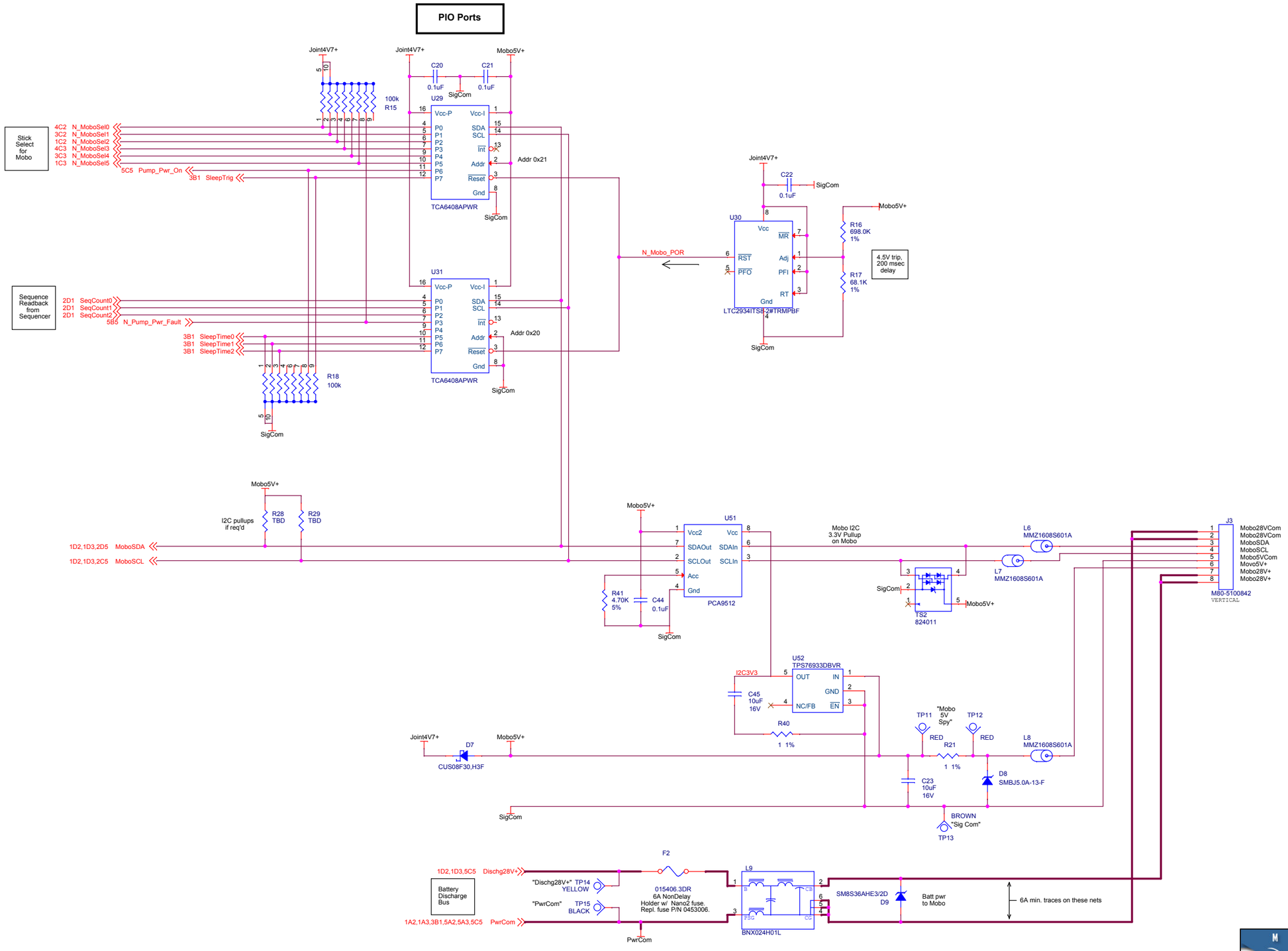

Monterey Bay Aquarium Research Institute
7700 Sandholdt Road
Moss Landing, CA 95039
(831) 775-1700
www.mbari.org

MBARI proprietary information (c) MBARI 2017

Title: Schematic, Mobo Interface, Lower Half Elex, Coastal Float		Document Number: 100221251	Rev: <Rev>
Variant: <variant>			
Size: Custom	Date: Thursday, April 25, 2019	Engineer: Mellinger	Sheet 4 of 5
Design File: X:\CPF\ELECTRICAL ENGR\ORCAD PROJECTS\EDS STUFF\LOWER HALF ELEX P2\SCHEMATICS\100221251 CPF LOWER			
Schematic Name: Schematic1.HE-CPF-P2	Page Name: 4:MoboIntrc	Layout File: <Layout File>	