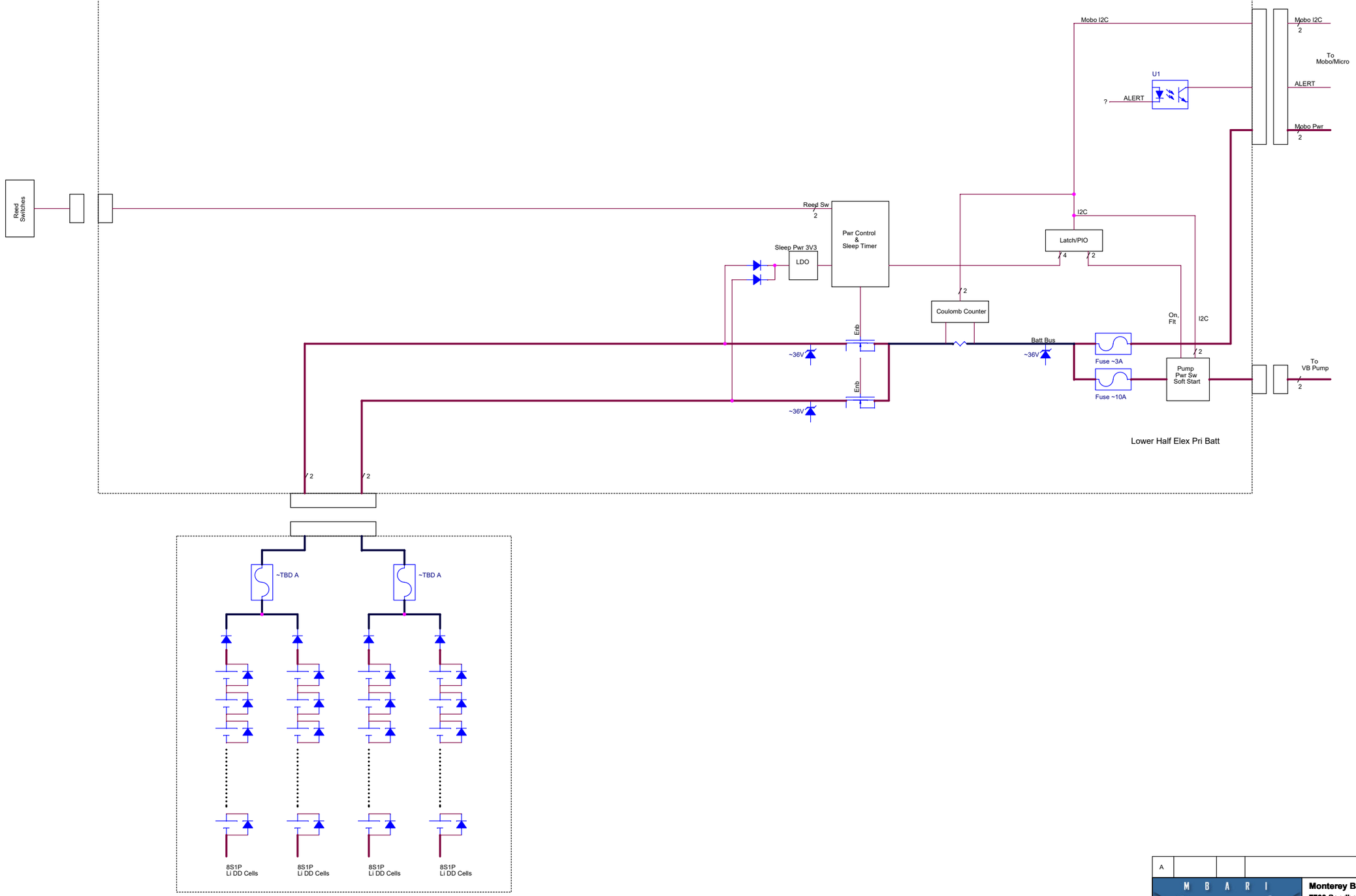

A

Monterey Bay Aquarium Research Institute
7700 Sandholdt Road
Moss Landing, CA 95039
(831) 775-1700
www.mbari.org

MBARI proprietary information (c) MBARI 2017

Title: Block Diagram, Lower Half Elex Pri Batt, Coastal Float	Document Number: 100221549	Rev
Variant: <variant>		
Size: Custom	Date: Thursday, July 22, 2021	Engineer: Mellinger
Sheet 1 of 1		
Design File: X:\CP\ELECTRICAL ENGR\ORCAD PROJECTS\EDS STUFF\LOWERHALFELEXPRIBATT\SCHEMATICS\LOWERHALFELEXI		
Schematic Name: PrimaryBattSysBlockDiagram	Page Name: SinglePack	Layout File: <Layout File>