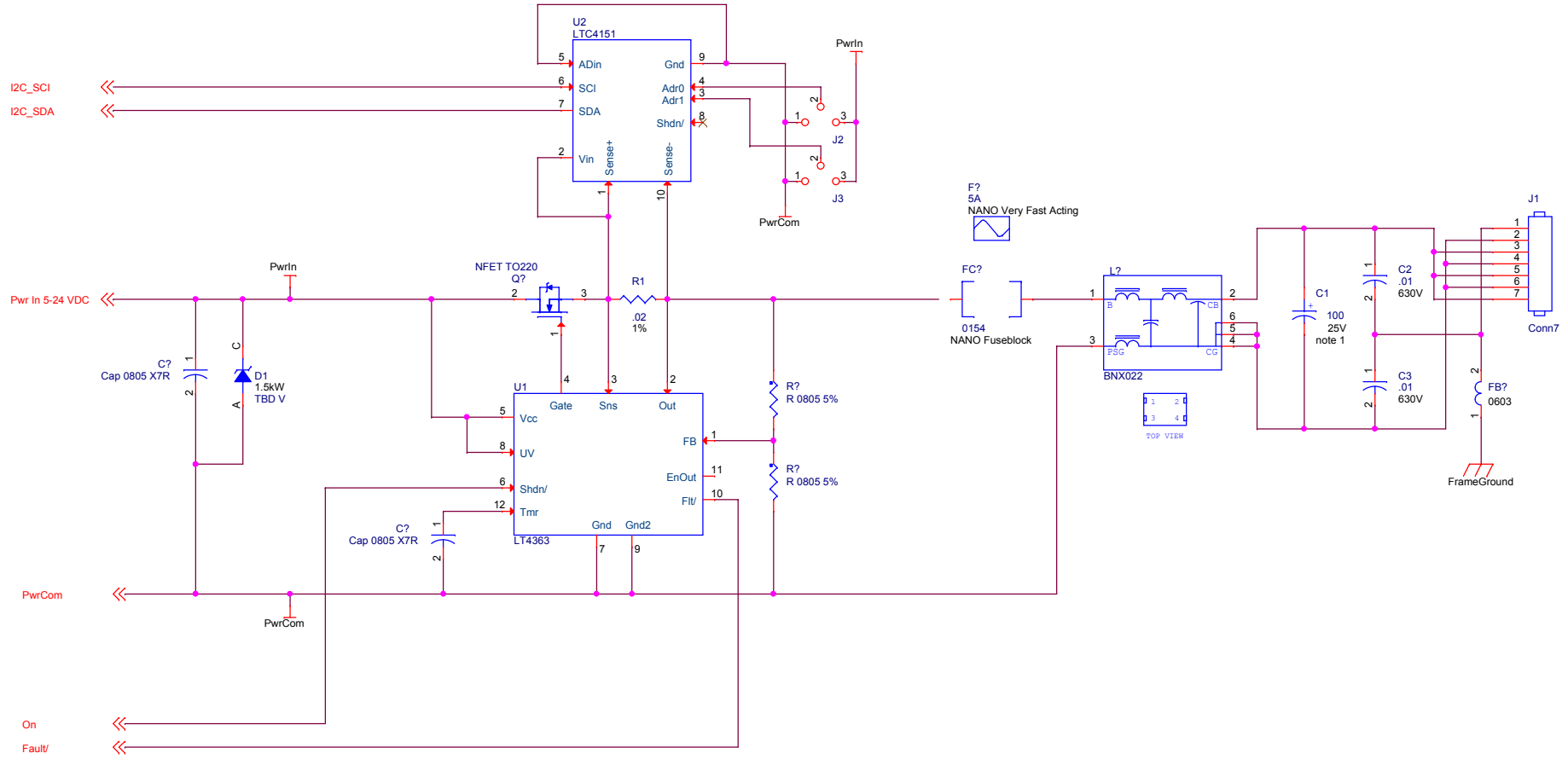

Monterey Bay Aquarium Research Institute 7700 Sandhold Road, Moss Landing, CA 95039			
Title Switch Block Concept, Coastal Profiling Float			
Engineer Mellinger	Size B	Document Number <Doc>	Layout File <Layout File>	Rev <Rev>
Layout <Layout>	Date: Friday, December 05, 2014		Sheet 0 of 1	