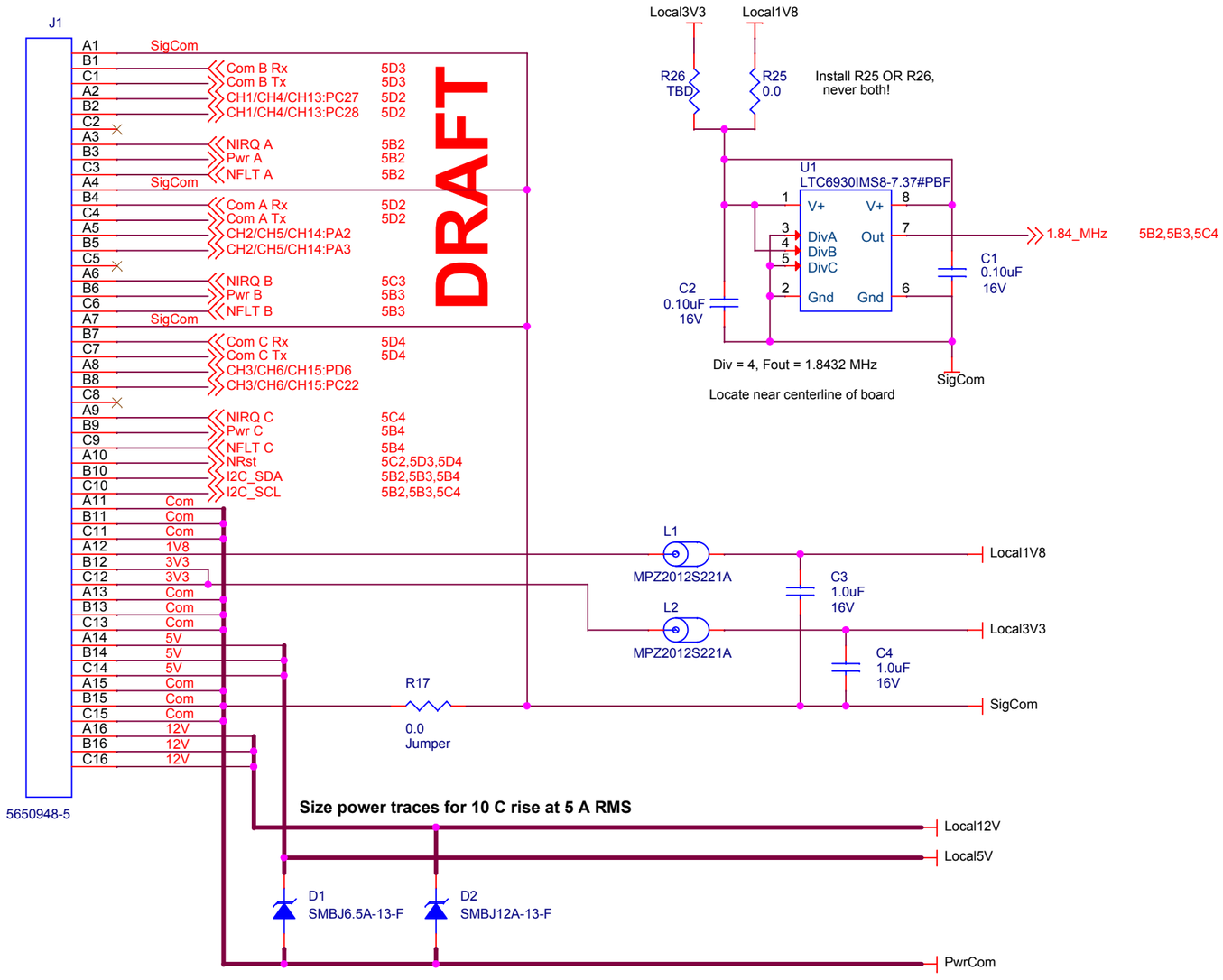

DRAFT

C	22 Apr 2016	ECM	Swap Com A and Com B Rx/Tx, to associate SOM Com2 with Channel A for Native Mode flow control
B	12 Feb 2016	ECM	Fix NIRQ and NFLT signal names; add 1.8V/3.3V option for oscillator
A	4 Feb 2016	ECM	Initial release for review

Monterey Bay Aquarium Research Institute
7700 Sandholdt Road
Moss Landing, CA 95039
(831) 775-1700 www.mbari.org

(c) MBARI 2015

Title	Document Number	Rev
Schematic, Bus Interface, Power Switch Board, Coastal Profiling Float	**100221094**	**C**

Size	Date:	Engineer	Sheet	of
B	**Friday, April 22, 2016**	**Mellinger**	**1**	**5**

Design File
X:\TECHSERVICES\PCB_LAYOUT\OPEN_WORK_SPACE\100221094RA_CPF_POWERSWITCH\SCHEMATICS\100221094-CPF

Schematic Name	Page Name	Layout File
100221094CPF-PwrSwitchSchematic	**01BusInterface**	**<Layout File>**

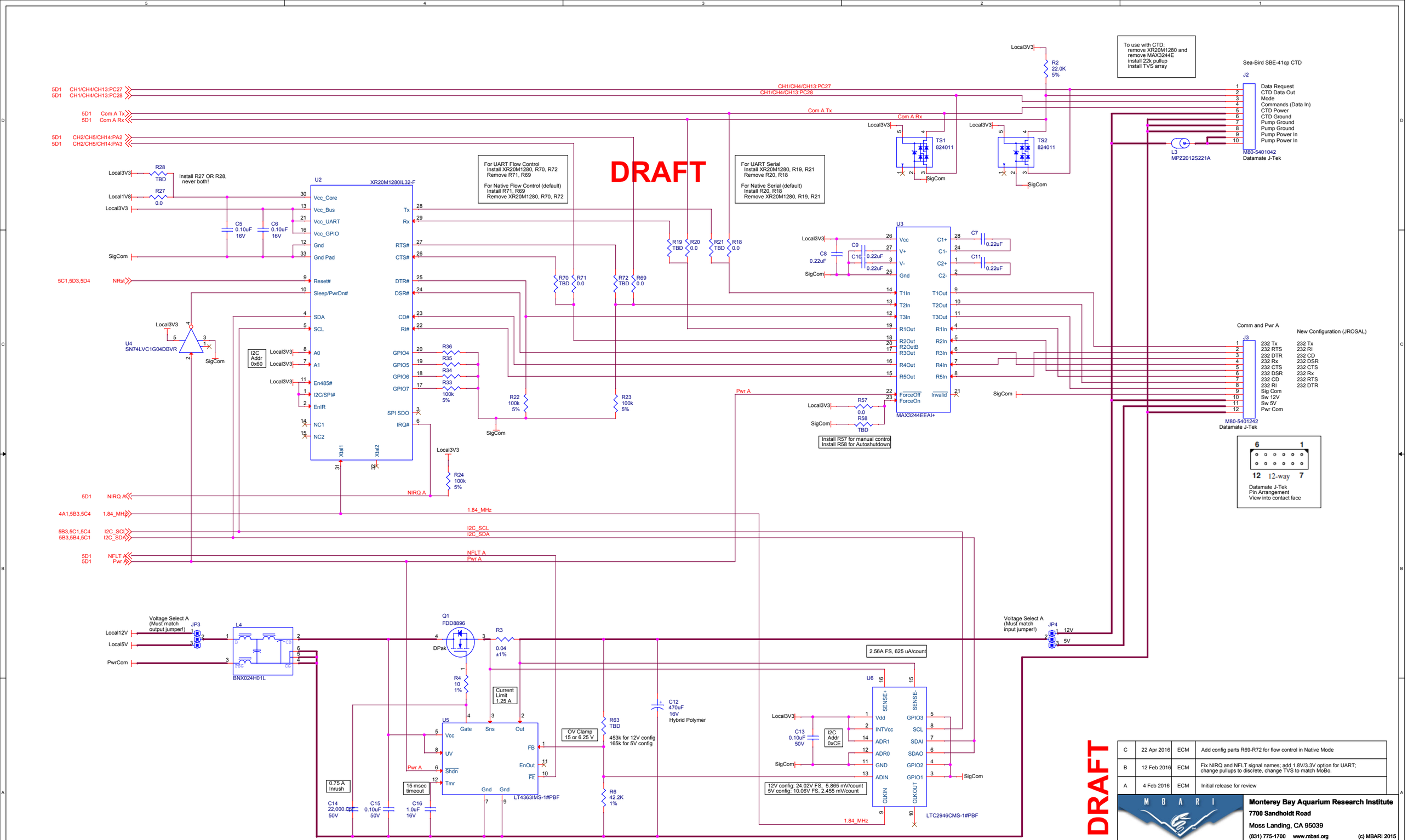

C	22 Apr 2016	ECM	Add config parts R69-R72 for flow control in Native Mode
B	12 Feb 2016	ECM	Fix NIRQ and NFLT signal names; add 1.8V/3.3V option for UART; change pullups to discrete, change TVS to match MoBo.
A	4 Feb 2016	ECM	Initial release for review

DRAFT

Monterey Bay Aquarium Research Institute
7700 Sandholdt Road
Moss Landing, CA 95039
(831) 775-1700 www.mbari.org

(c) MBARI 2015

Title	Document Number	Rev
Schematic, Channel A, Power Switch Board, Coastal Profiling Float	100221094	C

Size	Date:	Engineer	Sheet	of
Custom	Friday, April 22, 2016	Mellinger	2	5

Design File
X:\TECHSERVICES\PCB_LAYOUT\OPEN_WORK_SPACE\100221094RA_CPF_POWERSWITCH\SCHEMATICS\100221094-CPF

Schematic Name	Page Name	Layout File
100221094CPF-PwrSwitchSchematic	02ChannelA	<Layout File>