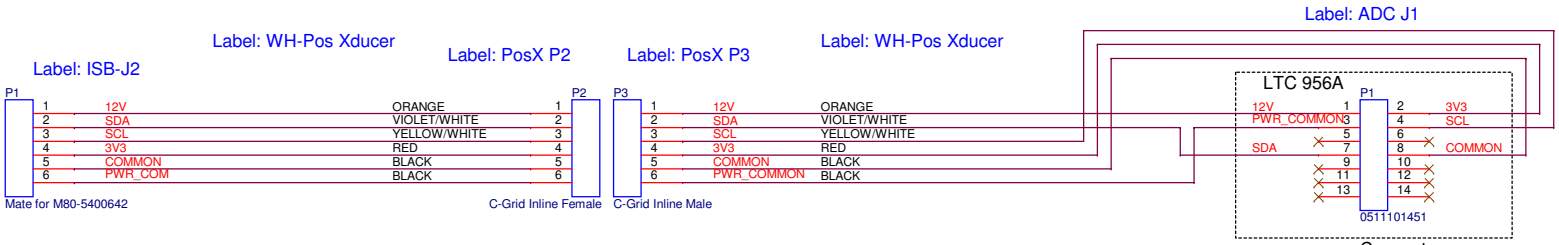


<------ Length = xx inches------>
All conductors 24 AWG 1.1mm max. diameter Teflon insulation
Weico 2324/19 or eq.

<------ Length = xx inches------>
All conductors 24 AWG 1.1mm max. diameter Teflon insulation
Weico 2324/19 or eq.

Total Length = 40"
Length of individual sections TBD

Connector:
Molex PN# 0511101451
Digikey PN# WM18047-ND

Pins:
Molex PN# 050394810
Digikey PN# WM1128-ND

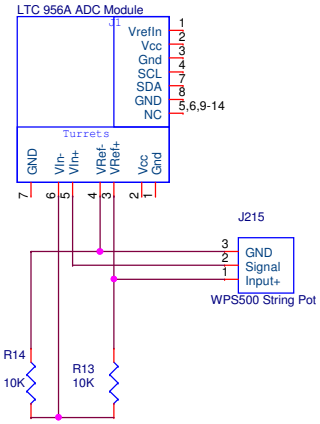


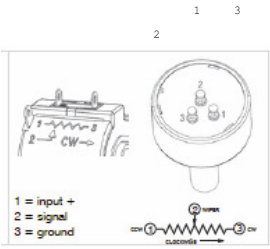


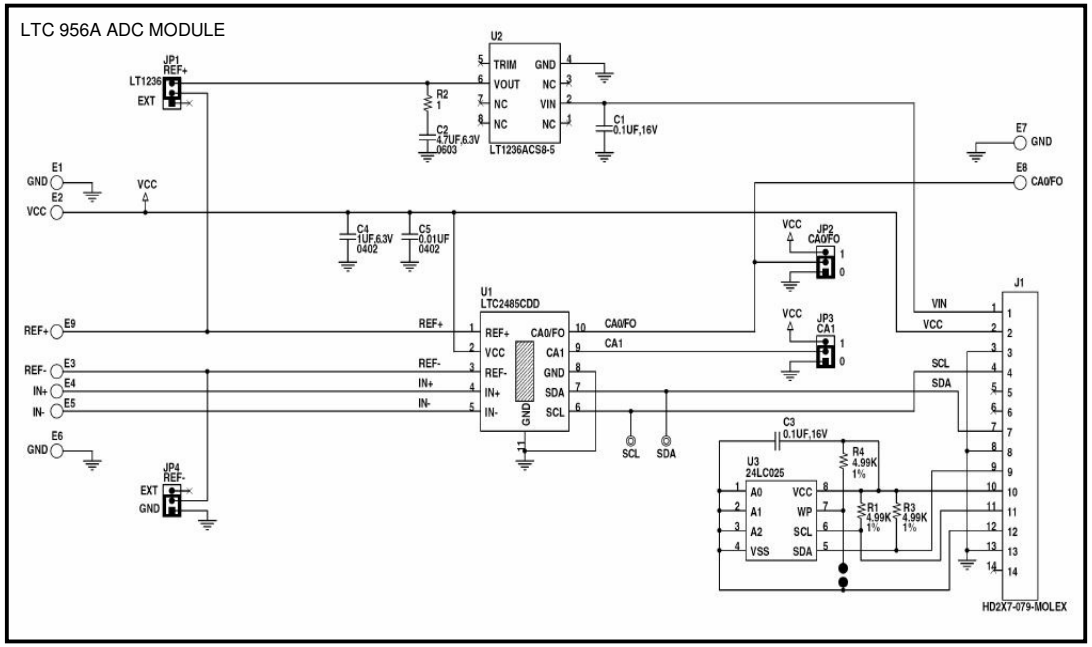


| | | | | |
|---|---|---|---|---|
| Monterey Bay Aquarium Research Institute<br>7700 Sandholdt Road, Moss Landing, CA 95039 | | | Title<br>WH-Pos Xducer | |
| Engineer<br>Kecy | Size<br>B | Document Number<br><Doc> | Layout File<br><Layout File> | Rev<br>A |
| Layout<br><Layout> | Date: Thursday, October 10, 2019 | | Sheet 1 of 1 | |