Encoder MILE 512–4096 CPT, 2 channels, with line driver

Integrated into motor

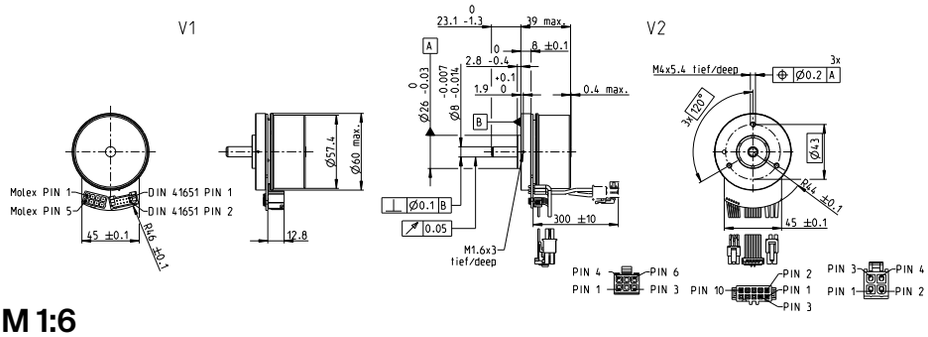

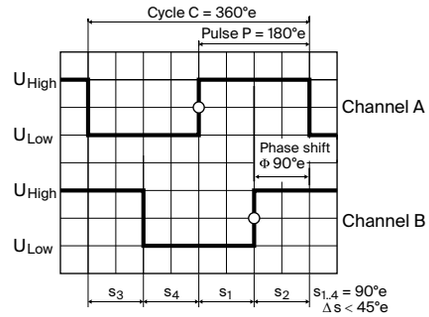

M 1:6

Direction of rotation cw (definition cw p. 90)

- Stock program
- Standard program
- Special program (on request)

Part numbers				
V1 with connector	651156	651163	651166	651168
V2 with cable and connector	421985	421986	421987	421988
Type				
Counts per turn	512	1024	2048	4096
Number of channels	2	2	2	2
Max. operating frequency (kHz)	1000	1000	1000	1000
Max. speed (rpm)	6000	6000	6000	6000

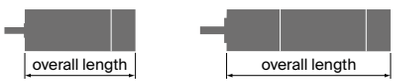

Modular system

+ Motor	Page	+ Gearhead	Page	+ Brake	Page	Overall length L1 max. [mm] / • see Gearhead			
EC 60 flat, 100 W	321					39.0	39.0	39.0	39.0
EC 60 flat, 100 W	321	GP 52, 4 - 30 Nm	444			•	•	•	•
EC 60 flat, 100 W	321	GB 80	458			•	•	•	•
EC 60 flat, 150 W	322					39.0	39.0	39.0	39.0
EC 60 flat, 150 W	322	GP 52, 4 - 30 Nm	444			•	•	•	•
EC 60 flat, 150 W	322	GB 80	458			•	•	•	•
EC 60 flat, 200 W	323					46.5	46.5	46.5	46.5
EC 60 flat, 200 W	323	GP 52, 4 - 30 Nm	444			•	•	•	•
EC 60 flat, 200 W	323	GB 80	458			•	•	•	•

Technical data

Supply voltage V_{CC}	5 V ±10%
Typical current draw	15 mA
Output signal	CMOS compatible
Signal rise time (typically, at C_L = 25 pF, R_L = 1 kΩ, 25 °C)	100 ns
Signal fall time (typically, at C_L = 25 pF, R_L = 1 kΩ, 25 °C)	100 ns
Operating temperature range	-40...+100 °C
Moment of inertia of code wheel	≤ 13 gcm²
Output current per channel	max. 4 mA
Open collector output of the Hall sensors with integrated pull-up resistor	10 kΩ ±20%
Wiring diagram for Hall sensors see p. 69	

Additional information can be found under 'Downloads' in the maxon online shop.

Pin allocation

Connection V1
Motor + Sensors
Pin 1 Hall sensor 1
Pin 2 Hall sensor 2
Pin 3 V_{Hall} 4.5...18 VDC
Pin 4 Motor winding 3
Pin 5 Hall sensor 3
Pin 6 GND
Pin 7 Motor winding 1
Pin 8 Motor winding 2

Encoder
Pin 1 N.C.
Pin 2 V_{CC}
Pin 3 GND
Pin 4 N.C.
Pin 5 Channel $\overline{A}$
Pin 6 Channel A
Pin 7 Channel $\overline{B}$
Pin 8 Channel B
Pin 9 Do not connect
Pin 10 Do not connect

Pin type:
46015-0806 Molex
DIN 41651/EN 60603-13

Connection V2
Sensors (AWG 28)
Pin 1 Hall sensor 1
Pin 2 Hall sensor 2
Pin 3 Hall sensor 3
Pin 4 GND
Pin 5 V_{Hall} 4.5...18 VDC
Pin 6 N.C.

Motor (AWG 18)
Pin 1 Motor winding 1
Pin 2 Motor winding 2
Pin 3 Motor winding 3
Pin 4 Not connected

Encoder (AWG 28)
Pin 1 N.C.
Pin 2 V_{CC}
Pin 3 GND
Pin 4 N.C.
Pin 5 Channel $\overline{A}$
Pin 6 Channel A
Pin 7 Channel $\overline{B}$
Pin 8 Channel B
Pin 9 Do not connect
Pin 10 Do not connect

43025-600 Molex
39-01-2040 Molex
DIN 41651/EN 60603-13

Connection example

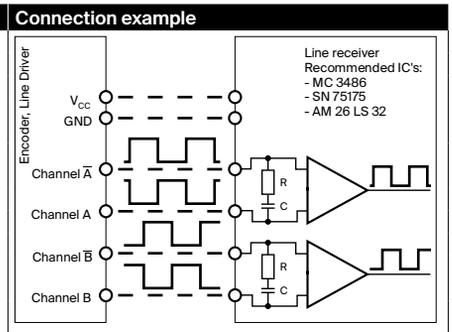

Opt. terminal resistance R = typical 120 Ω
Capacitor C ≥ 0.1 nF per m line length

© 2025 maxon. All rights reserved. February edition. Subject to change.