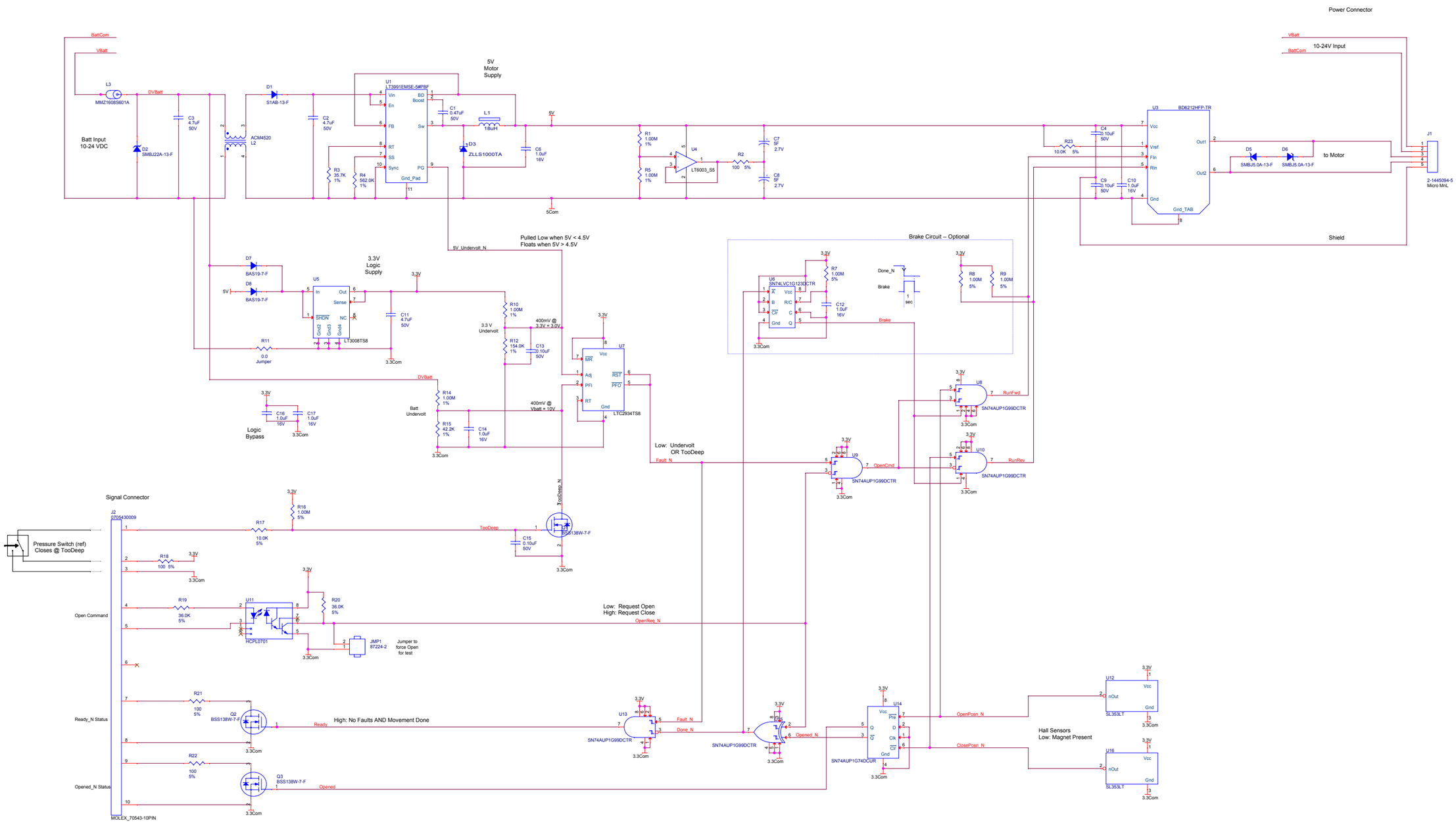


| | | | |
|---|---|---|---|
| 1.0 | 15 Sep 2012 | ECM | Delete soft-start, change TooDeep logic, change U7 to push-pull |


M B A R I

MBARI
7700 Sandholdt Rd
Moss Landing CA 95039
831-775-1700


Schematic, Motor Control, Motorized VB Isolation Valve, Tethys LRAUV


Ed Mellinger
meed@mbari.org


| Size | Dwg No | Sheet | Rev | Date |
|---|---|---|---|---|
| D | 10020689 | 1 of 3 | 1.0 | Monday, November 12, 2012 |

X:\900739.LRAUV\PROJECT.DRAWINGS\PROJECT.EE.DWGS\VB CONTROL\MOTORIZEDVBISOVALVE\SCHEMATIC\TETHYS MOTORIZED VB ISOLATION VALVE.DSN