Navigator ADCP/DVL User's Guide

P/N 957-6173-00 (September 2001)

RD Instruments
Acoustic Doppler Solutions

Table of Contents

1 Introduction 1

2 Navigator ADCP/DVL Applications 1
2.1 Self-Contained Applications 2

3 System Overview 3
3.1 Navigator ADCP/DVL Overview 3
3.2 I/O Cable Overview 5
3.3 RS-232 to RS-422 Converter Overview 6
3.4 Navigator Options 6
3.4.1 Optional External Battery Pack 6
3.4.2 Optional Flash Memory Card 6
3.5 Spare Parts 7

4 Navigator Care 8
4.1 General Handling Guidelines 8
4.2 Assembly Guidelines 8
4.3 Deployment Guidelines 9

5 Setup the WorkHorse Navigator ADCP/DVL 9
5.1 Serial Communication 10
5.2 What if the Navigator Does Not Respond 10

6 Software 10
6.1 System Requirements 11
6.2 Software Installation 11
6.3 Utility Software 11

7 Power 12
7.1 AC Adapter 13
7.2 External Battery Pack 13
7.3 Bench-Top Battery Power Requirements 14
7.4 Operation Modes 14

8 Testing Your Navigator 15

9 Compass Calibration 16
9.1 Preparing for Calibration 16
9.2 Compass Calibration Verification 16
9.3 Compass Calibration Procedure 18

10 Internal Pressure Sensor 20
10.1 Pressure Sensor Maintenance 20

11 Deployment Guide 21
11.1 Deployment Checklist 21
11.2 Prepare the ADCP/DVL for Deployment 22
11.3 ADCP/DVL Software 22
11.4 Deploy the ADCP/DVL 23
11.5 Send the Deployment Commands 24
11.5.1 Using DumbTerm to Send a Command File 24
11.5.2 Using the GO-DVL Batch File 25
11.5.3 Creating or Modifying Command Files 26
11.6 Using SHIPTRAK 28
11-6.1 SHIPTRAK Commands 29

12 Frequently Asked Questions 33
12.1 Mounting Questions 33
12.2 Electrical Questions 36
12.3 Operational Questions 37
12.4 Specification and Accuracy Questions 44

13 Technical Support 48

List of Figures

Figure 1. Navigator ADCP/DVL Overview 4
Figure 2. Connecting and Disconnecting the I/O Cable 5
Figure 3. I/O Cable Overview 5
Figure 4. 25-pin to 9-pin RS-232 to RS-422 Converter 6
Figure 5. Memory Card Overview 7
Figure 6. WorkHorse Navigator Connections 9
Figure 7. External Battery Pack Connection 14
Figure 8. DumbTerm Command History Box 17
Figure 9. Compass Alignment 19
Figure 10. Visual Inspection before Deployment 21
Figure 11. Prepare the ADCP/DVL 22
Figure 12. Real-Time Deployment 23
Figure 13. Using DumbTerm to Send the Command File 24
Figure 14. Starting GO-DVL 25
Figure 15. Navigator SHIPTRAK Program Display 28
Figure 16. User Defined Screen 29
Figure 17. Automatic Scaling Screen 30
Figure 18. Colors for Shiptracks, Depths, and Filename 30
Figure 19. Directional Plot 31
Figure 20. Altitudes and Depth Plot 31
Figure 21. Orientation Plot 32
Figure 22. Other Sensor Data 32

List of Tables

Table 1: Navigator Self-Contained Application Guide 2
Table 2: Spare Parts 7
Table 3: Navigator Software Main Modules 10
Table 4: Navigator DOS Utility Software 12
Table 5: Navigator ADCP/DVL Tests 15

RD Instruments
Acoustic Doppler Solutions

Navigator User's Guide

1 Introduction

Thank you for purchasing the RD Instruments (RDI) WorkHorse Navigator Acoustic Doppler Current Profiler/Doppler Velocity Log (ADCP/DVL). This guide is designed to help first time Navigator users to set up, test, and deploy their ADCP/DVL.

This booklet is designed for use *with* the other Navigator Technical Manual guides. Where needed, there are references to detailed information and figures contained in the Navigator Technical Manual.

Navigator deployments are most often Real-Time but can be Self-Contained. Real-Time use refers to the fact you are viewing the data as the ADCP/DVL collects it via a personal computer. This data is also stored on the computer to allow for data playback and processing at a later time.

Typically, deployments are considered to be Self-Contained when the ADCP/DVL is remotely deployed and powered using the optional External Battery Pack or from shore. When power is provided from shore, the deployment is still considered Self-Contained, but this reference guide may not consider all of the possibilities of this application.

NOTE. When you receive your Navigator, look for a set up card that shows all of the pieces you should have in your box. If anything is missing or damaged, contact RDI immediately.

2 Navigator ADCP/DVL Applications

The Workhorse Navigator provides a powerful combination of sensors in a compact package for ROV, AUV, or towed fish navigation and control. A member of the Workhorse ADCP™ Series, the Workhorse Navigator measures 3-D bottom track and/or water-referenced vehicle velocity and altitude. It also measures heading, pitch and roll, and temperature. The Workhorse

Navigator can be upgraded to perform water current profiling and dredge plume or sediment tracking.

When considering ROV/AUV applications, there are four options on how the Navigator is setup to collect data and how the data is displayed.

1. The user provides everything.
2. RDI's *DumbTerm* software is used to send the commands to setup the ADCP/DVL (see "Deployment Guide," page 21 for help on using *DumbTerm*); the user provides software to handle data collection and display.
3. RDI's *GO-DVL* software is used to setup the ADCP/DVL and handle data collection; *SHIPTRAK* is used to display the data (see "Deployment Guide," page 21 for help on using *GO-DVL* and *SHIPTRAK*).
4. The user uses a third party software package such as EIVA.

2.1 Self-Contained Applications

The Navigator can be used as a fully self-contained system. This means that it uses the optional external battery case for power and internal recorder with optional flash memory for the storage of all data that you have set it up to collect. Using the optional external battery, recorder, and Water Profiling upgrade, the Navigator can be used for several-month autonomous current profile deployments from temporary or permanent mounting in the ocean, near-shore, harbors, and lakes.

WinSC is the software package for self-contained ADCP setup, data collection, and data review. *Plan* (part of *WinSC*) lets you enter known or "best-guess" values for the various ADCP profiling parameters and shows predictions of expected results. For detailed information on how to use *WinSC* and *Plan*, see the *WinSC* User's Guide.

Table 1: Navigator Self-Contained Application Guide

Application	Blue Water	Costal and Continental Shelf
Autonomous deployment	• Oceanography • Energy transport • Environmental monitoring • Engineering stress determination • Circulation/model studies • Boundary layer studies	• Environmental monitoring • Costal engineering • Enabling safe movement • Measuring Power plant discharge • Protecting coastal land forms • Detecting sewer outfall • Monitoring sensitive environments • Planning new ports
Lowered	• Deep water oceanography	

NOTE. *WinSC* is not provided with WorkHorse Navigator systems, but is available for free download at www.rdinstruments.com.

NOTE. Water Profiling is a feature upgrade for Navigators.

3 System Overview

The Navigator system consists of an ADCP/DVL, cables, and software. They only require the addition of a Windows® compatible computer to collect data.

3.1 Navigator ADCP/DVL Overview

The transducer assembly contains the transducer ceramics and electronics. Standard acoustic frequencies are 300, 600, and 1200kHz. See the outline drawings in the Installation Guide for dimensions and weights.

I/O Cable Connector – Input/Output (I/O) cable connects the Navigator ADCP/DVL to the computer.

Beam-3 Mark – The Beam-3 mark shows the location of Beam-3 (Forward).

Urethane Face – The urethane face covers the transducer ceramics. Never set the transducer on a hard surface. The urethane face may be damaged.

Housing – The standard Navigator housing allows deployment depths to 2000 meters.

Pressure Sensor – The Optional pressure sensor measures water pressure (depth).

Transducer Head – The Navigator electronics and transducer ceramics are mounted to the transducer head. When assembling the unit, match the transducer Beam 3 mark with the Beam 3 mark on the end-cap.

End-Cap – The end-cap holds the I/O cable connector. When assembling the unit, match the Beam 3 mark on the end-cap with Beam 3 mark on the transducer.

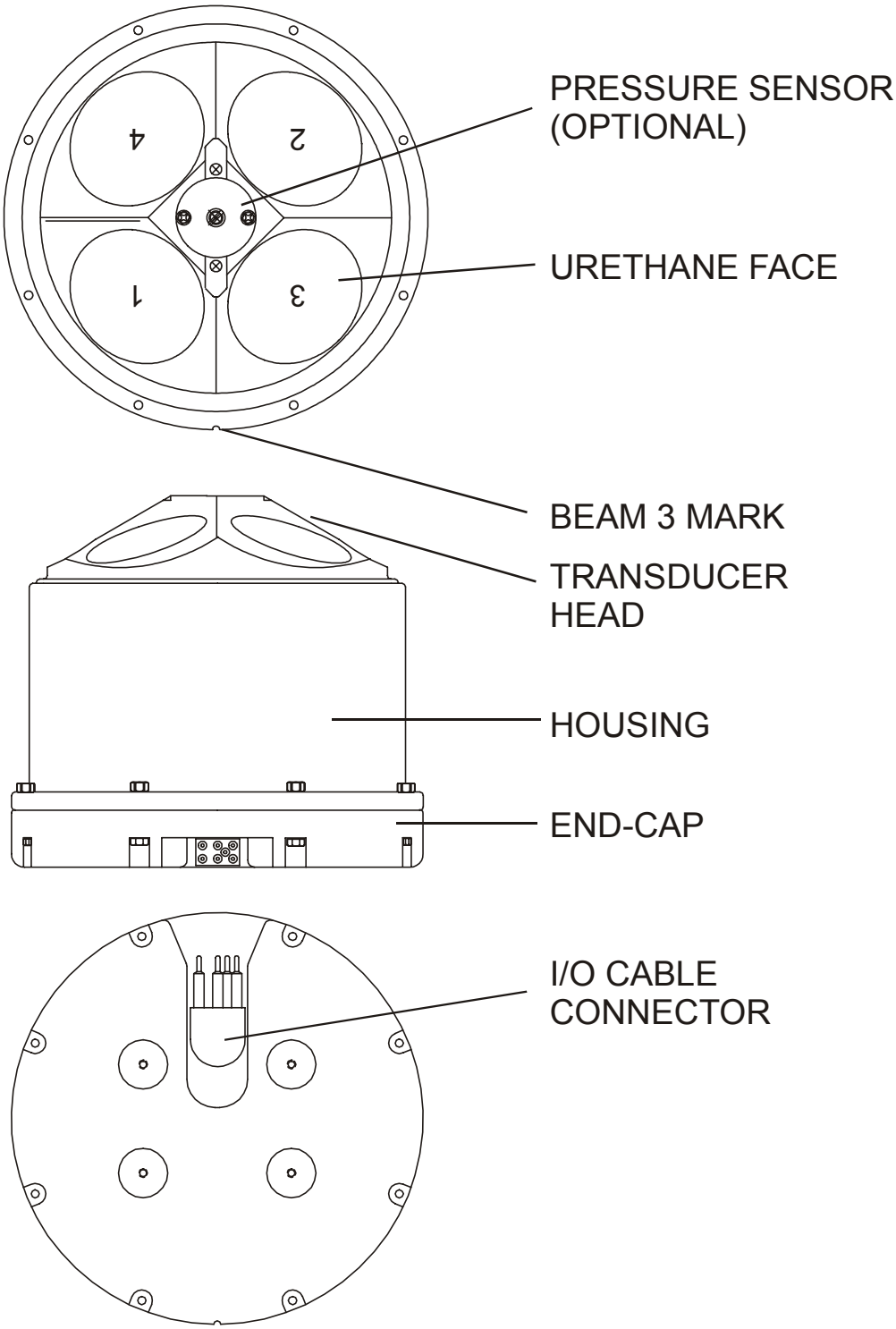

Figure 1. Navigator ADCP/DVL Overview

3.2 I/O Cable Overview

Always remove the retaining strap on the end-cap underwater-connect cable and dummy plug when disconnecting them. **Failure to do so will break the retainer strap.**

Do not apply any upward force on the end-cap connector as the I/O cable is being disconnected. **Stressing the end-cap connector may cause the ADCP/DVL to flood.** Read the Maintenance guide for details on disconnecting the I/O cable.

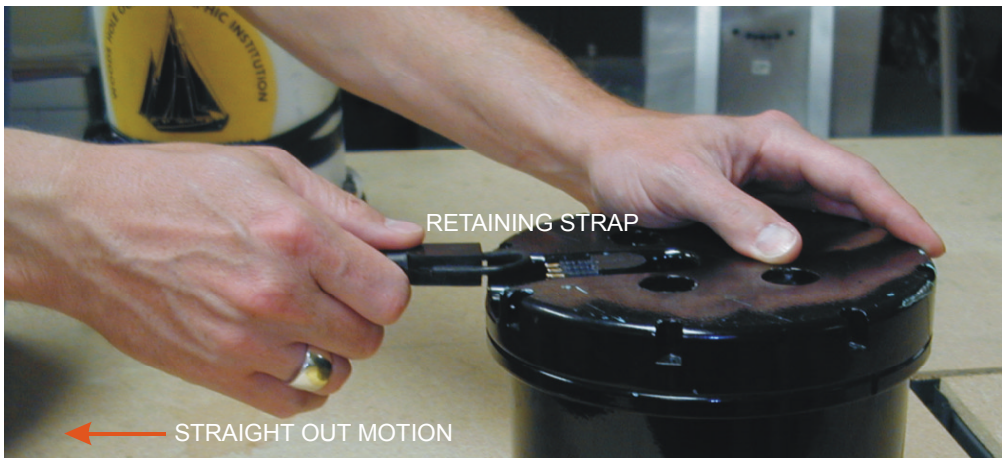

Figure 2. Connecting and Disconnecting the I/O Cable

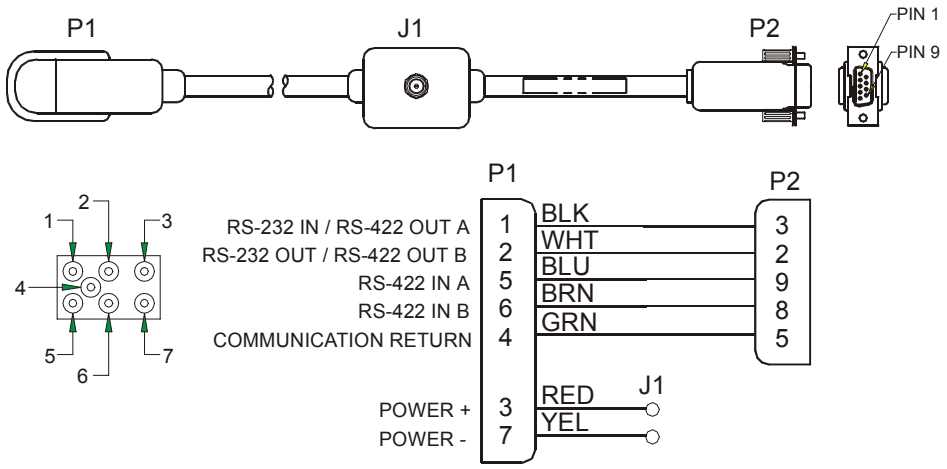

Figure 3. I/O Cable Overview

3.3 RS-232 to RS-422 Converter Overview

The optional adapter converts RS-232-to-RS-422.

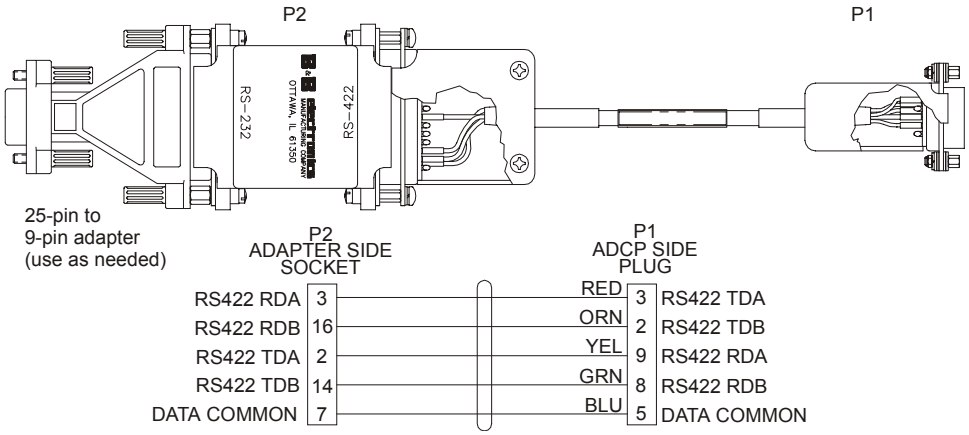

Figure 4. 25-pin to 9-pin RS-232 to RS-422 Converter

3.4 Navigator Options

The Navigator can also be used for self-contained current profile operation by adding the optional External Battery Pack and optional flash memory. Both battery capacity and memory can be increased with upgrades for longer deployments.

3.4.1 Optional External Battery Pack

The optional External Battery Pack (Figure 7, page 14) can be used for backup power or to provide power for self-contained deployments. It consists of a housing, two 400 watt-hours batteries, blank end-cap, end-cap with female 7-pin connector, and External Battery Pack cable.

3.4.2 Optional Flash Memory Card

Flash memory cards (see Figure 5, page 7) are available in 16, 20, 40, 85 and 220-MB cards. The internal recorder holds two cards for a maximum of 440 MB of recording space. The PC Card recorder is located on the Digital Signal Processor (DSP) board inside the Navigator's electronics. To recover data, the card can be removed and used in a personal computer (PC), or left in the Navigator, and accessed by using *DumbTerm* (see the RDI Tools User's Guide).

NOTE. The WorkHorse Navigator does not come with flash memory, but has the same capacity as a WorkHorse Sentinel.

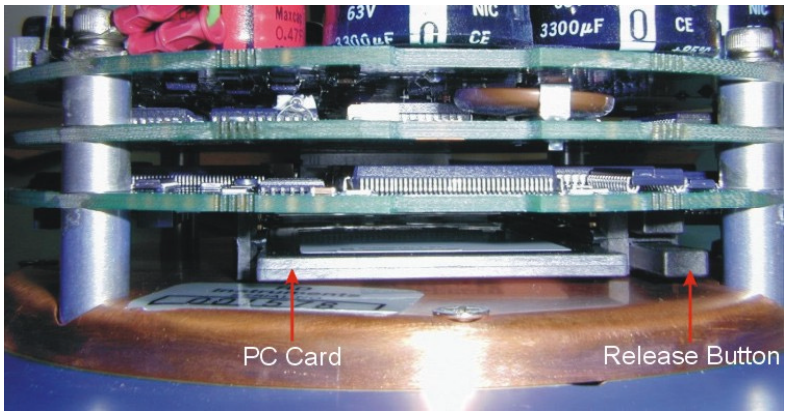

Figure 5. Memory Card Overview

NOTE. To recover or erase data on the optional recorder, use *DumbTerm*. See the RDI Tools User's Guide for details on how to use *DumbTerm*.

3.5 Spare Parts

The following parts are included in the spare parts kit.

Table 2: Spare Parts

Description	Part number
O-ring, face	2-260
O-ring, bore	2-258
O-ring, backup	2-258, PARBAK
Desiccant, sealed bag	DES3
Lubricant, silicone, 5.3 oz, Dow-Corning	DC-111
Fuse, 3.0 Amp, 250V	GMA-3A

4 Navigator Care

This section contains a list of items you should be aware of every time you handle, use, or deploy your Navigator. *Please refer to this list often*.

4.1 General Handling Guidelines

- Never set the transducer on a hard or rough surface. **The urethane faces may be damaged.**
- Always remove the retaining strap on the end-cap underwater-connect cable and dummy plug when disconnecting them. **Failure to do so will break the retainer strap.**
- Do not apply any upward force on the end-cap connector as the I/O cable is being disconnected. **Stressing the end-cap connector may cause the ADCP/DVL to flood.** Read the Maintenance guide for details on disconnecting the I/O cable.
- Do not expose the transducer faces to prolonged sunlight. **The urethane faces may develop cracks.** Cover the transducer faces on the Navigator if it will be exposed to sunlight.
- Do not expose the I/O connector to prolonged sunlight. **The plastic may become brittle.** Cover the connector on the Navigator if it will be exposed to sunlight.
- Do not store the ADCP/DVL in temperatures over 75 degrees C. **The urethane faces may be damaged.** Check the temperature indicator inside the shipping case. It changes color if the temperature limit is exceeded.
- Do not scratch or damage the O-ring surfaces or grooves. **If scratches or damage exists, they may provide a leakage path and cause the ADCP/DVL to flood.** Do not risk a deployment with damaged O-ring surfaces.
- Do not lift or support a Navigator by the external I/O cable. **The connector or cable will break.**

4.2 Assembly Guidelines

- Read the Maintenance guide for details on Navigator reassembly. Make sure the housing assembly O-rings stay in their groove when you re-assemble the Navigator. Tighten the hardware as specified. **Loose, missing, stripped hardware, or damaged O-rings can cause the Navigator transducer to flood.**

- Place a light amount of DC-111 lubricant on the end-cap connector pins (rubber portion only). **This will make it easier to connect or remove the I/O cable and dummy plug.**
- Do not connect or disconnect the I/O cable with power applied. An exception to this is the optional external battery case. The external battery case connector is always "hot" when batteries are installed. When you connect the cable with power applied, you may see a small spark. **The connector pins may become pitted and worn.**
- The Navigator I/O cable is *wet* mate-able, not *under water* mate-able.

4.3 Deployment Guidelines

- Align the compass whenever the optional recorder module is replaced, or when any ferrous metals are relocated inside or around the Navigator housing. **Ferro-magnetic materials affect the compass.**
- The AC power adapter is not designed to withstand water. **Use caution when using on decks in wet conditions.**
- Avoid using ferro-magnetic materials in the mounting fixtures or near the Navigator. **Ferro-magnetic materials affect the compass.**

5 Setup the WorkHorse Navigator ADCP/DVL

Figure 6 illustrates how to connect the Navigator cables and adapters on your workbench. You will need a container of water large enough to submerge the Navigator's transducer head into during testing (two to three inches of water is sufficient). Testing the Navigator out of water may cause some tests to fail but causes no harm to the Navigator.

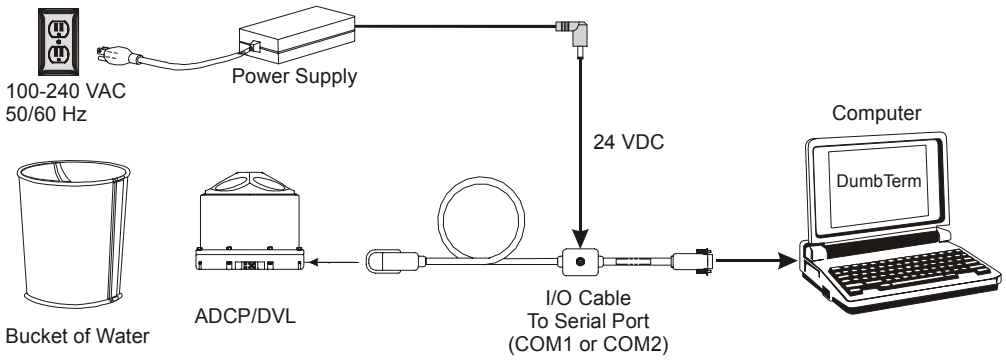

Figure 6. WorkHorse Navigator Connections

5.1 Serial Communication

The standard communications setting for Navigators is RS-232, 9600-baud, no parity, 8 data bits and 1 stop bit. If the serial protocol for the **ADCP/DVL** is set for RS422 and your computer expects RS232, you will need an optional RS232 to RS422 adapter between the Navigator cable and your computer. You can set the Navigator for baud rates other than 9600 baud.

RS422. The WorkHorse Navigator is normally set for RS232, but it can be changed to RS422 by changing a switch setting. The switch is in plain view on the top circuit board, near the cable connectors. Its settings are plainly marked on the board. This user's guide assumes that you use RS232.

5.2 What if the Navigator Does Not Respond

If your Navigator does not respond, check the serial port, cables, and power. If necessary, refer to the Troubleshooting Guide in the Navigator technical manual.

6 Software

RDI has utility programs to help you set up, use, test, and trouble-shoot your Navigator ADCP/DVL. Each program has a help file that you can print, or you can view help while running the program.

Table 3: Navigator Software Main Modules

Program Name	Description
DumbTerm	Windows ADCP/DVL communication program. Use this program to "talk" to the DVL and to run test script files. *DumbTerm* is included on the RDI Tools CD. For detailed information on how to use *DumbTerm*, see the *RDI Tools User's Guide*.
WinADCP (optional)	Gives users a visual display of the entire set of data. You can zoom in on a portion of the data for closer analysis and you can export data to text or MatLab files. For detailed information on how to use *WinADCP*, see the *WinADCP User's Guide*.
SHIPTRAK	DOS program used to collect and view your data with an integrated graphical display. For detailed information on how to use *SHIPTRAK*, see the "Deployment Guide," page 21.
GO-DVL	DOS Batch file used to configure and start the Navigator collecting data with *SHIPTRAK*. For detailed information on how to use *GO-DVL*, see the "Deployment Guide," page 21.

NOTE. *WinADCP* is only provided if the Navigator includes the water profiling upgrade.

6.1 System Requirements

The Navigator software requires the following:

- Windows 95®, Windows 98®, or Windows® NT 4.0 with Service Pack 4 installed
- Pentium class PC 233 MHz (350 MHz or higher recommended)
- 32 megabytes of RAM (64 MB RAM recommended)
- 6 MB Free Disk Space (20 MB recommended)
- One Serial Port (two High Speed UART Serial Ports recommended)
- Minimum display resolution of 800 x 600, 256 color (1024 x 768 recommended)

6.2 Software Installation

To install the Navigator software, do the following.

a. Insert the compact disc into your CD-ROM drive and then follow the browser instructions on your screen. If the browser does not appear, complete Steps “b” through “d.”

b. Click the **Start** button, and then click **Run**.

c. Type **<drive>:launch**. For example, if your CD-ROM drive is drive D, type **d:launch**.

d. Follow the browser instructions on your screen

6.3 Utility Software

The following DOS programs (on the RDI Tools CD) have been provided to supplement features not yet implemented into the Windows environment. RDI will incorporate these features in future releases. These programs will be installed to the directory C:\Program Files\Rd Instruments\Utilities when you run the RDI Tools installation program.

Table 4: Navigator DOS Utility Software

Program Name	Description
BBLIST	Executable program that can be operated through the Windows environment. This program will display binary data in tabular format as well as convert the data into an ASCII file.
BBBATCH	Automatically converts a named binary data set to a named ASCII data set using an existing format file. Use this program to convert binary files unattended through a DOS batch file.
BBCONV	Executable program that cannot be operated through the Windows environment. Removes user selected data from binary files and stores the information into ASCII comma delimited format. See BCONV.DOC for decoder file format.
BBMERGE	Executable program that cannot be operated through the Windows environment. BBMERGE merges ASCII comma delimited format data described by a decoder (.DEC) file into the raw BroadBand ADCP data file "infilename", resulting in an output ADCP data file called "outfilename". See BCONV.DOC for decoder file format.
BBSUB	Executable program that cannot be operated through the Windows environment. BBSUB starts copying ensembles from 'infilename' to 'outfilename' starting with the user specified “Start” and “End” ensemble number. This is intended to allow users to subsection binary data files.
SS	Executable program that can be operated through the Windows environment. SS allows you to quickly calculate the speed of sound in the water.
SURFACE	Executable program that cannot be operated through the Windows environment. Surface estimates the range from the ADCP to the water surface or bottom from the echo intensity data. This program does not change the original data. It creates a text file with the estimated ranges. Intended for customers to estimate where to cut off their data.
CHECKDAT	Executable program that cannot be operated through the Windows environment. CHECKDAT will scan a data file for missing ensembles, ensemble number out of order, bad checksum ensembles and ensembles with bit errors. If the DOS redirect command (> symbol) is used then the output will be placed into a file.
C++ Code Library	The C++ Code library has been provided to help you in the creation of your own programs. These files are provided as is and in general are not supported. Use at your own discretion. The files are located in the directory: C:\Program Files\Rd Instruments\Utilities\C_Code.

7 Power

The WorkHorse Navigator ADCP/DVL requires +20 to 60 VDC to operate. The standard AC Adapter runs on any standard AC power and supplies +24 VDC. The optional External Battery Pack provides +42 VDC. All Navigator tests and operations work equally well using the AC power adapter or optional external battery pack.

If both the power supply and the optional External Battery Pack and are connected, the Navigator will select the *highest* voltage source for use. The batteries (when fresh) supply +42 VDC and the power supply output is +24 VDC. The Navigator will draw all power from the External Battery Pack if the battery voltage is above +24 VDC (the power supply will have no effect).

NOTE. The +24 VDC AC adapter does not override the battery voltage! Substitute your own power supply with a voltage of +45 to 60 VDC to override the optional +42 VDC External Battery Pack.

7.1 AC Adapter

The AC Adapter runs on any standard AC power and supplies 24 VDC to run the Navigator. Substitute your own power supply with a voltage of 45 to 60 VDC during deployments to obtain the maximum range from the Navigator.

NOTE. Transmitted power increases or decreases depending on the input voltage. Higher voltage to the ADCP/DVL (within the voltage range of 20 to 60 VDC) will increase the transmitted power. The transmitted power is increased 6 DB if you double the input voltage from 24 VDC to 48 VDC. For a 300kHz Navigator ADCP/DVL, each additional DB will result in an increase in range of one default depth cell.

7.2 External Battery Pack

The optional External Battery Pack (see Figure 7, page 14) holds two 400 watt-hours batteries. To avoid affecting the compass, place the external battery case at least 30-cm away from the Navigator.

Because many deployments will use only a fraction of the capacity of a single battery pack, you may wish to reuse your battery packs. With experience, you should be able to reuse batteries successfully, but keep in mind the following:

- Standard Navigator battery packs hold 28 ‘D-cell’ alkaline batteries with a voltage, when new, of approximately 42 VDC.
- When the capacity of a battery pack is 50% used, the voltage (measured across the battery connector under no-load conditions) falls to approximately 32-35 volts. However, keep in mind that this voltage is not an accurate predictor of remaining capacity.
- Batteries should be replaced when the voltage falls below 30 VDC (measured across the battery connector under no-load conditions).
- Battery packs differ from one to another.
- If your deployment is important, weigh the cost of a new battery pack against the risk of lost data.

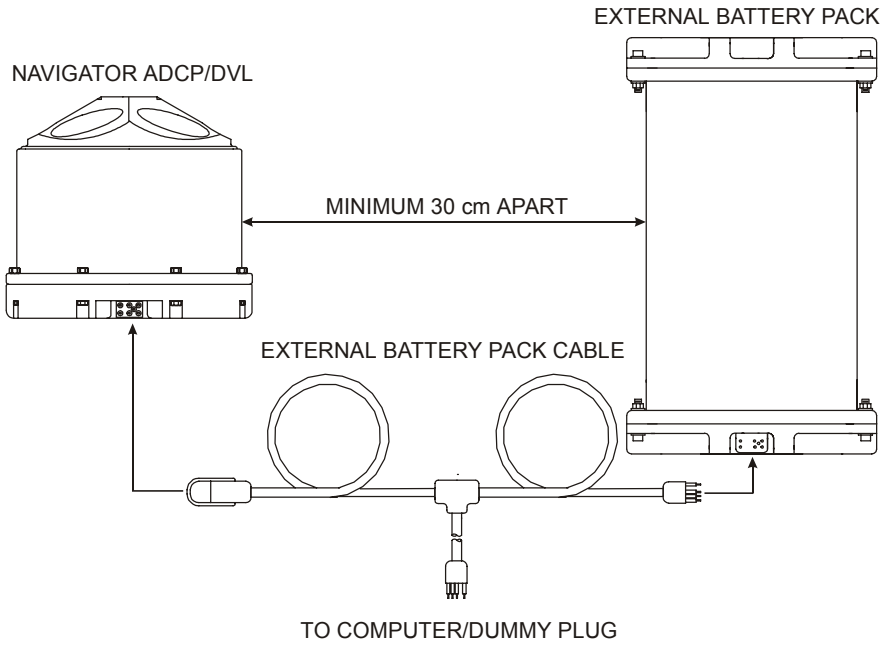

Figure 7. External Battery Pack Connection

7.3 Bench-Top Battery Power Requirements

While the Navigator is awake and responding to commands, it consumes approximately 2.2 watts. A single external battery pack supplies this power level for about five days. When the Navigator is asleep, it consumes less than one mw. The optional external battery pack supplies sleep power for years.

7.4 Operation Modes

The Navigator has two modes of operation: *command mode*, and *ping mode* (also referred to as “Deployment Saver” Mode). Depending on what mode the ADCP/DVL is in; it will go either to sleep or to resume pinging.

In the Command Mode

Whenever you wake up your Navigator, power dissipation increases from less than one mw to around 2.2 w. If you leave the Navigator in command mode without sending a command for more than five minutes, the Navigator automatically goes to sleep. This protects you from inadvertently depleting batteries.

In the Ping Mode

After you send commands to the Navigator that tells it to start collecting data, the Navigator goes into deployment saver mode. If power is somehow removed and later restored, the Navigator simply picks up where it left off and continues to collect data using the same setup.

8 Testing Your Navigator

Use the following steps to test the ADCP/DVL.

a. Interconnect and apply power to the system as described in the "Setup the WorkHorse Navigator ADCP/DVL," page 9.

b. Start the *DumbTerm* program (for help on using *DumbTerm*, see the RDI Tools User's Guide).

c. Press **<F2>** and run the script file TestWH.txt. The TestWH.txt script file runs PS0, PS3, PA, PC2, and the PC1 tests. The results of the tests will be printed to the screen and saved to the log file WH_RSLTS.txt. The WH_RSLTS.txt file will be created in the same directory that *DumbTerm* is running from.

Table 5 lists the tests *DumbTerm* runs, gives you guidelines for running the tests, and tells you what the results mean.

Table 5: Navigator ADCP/DVL Tests

Test	Guidelines	Results
PS0	Displays system parameters.	Verify the information is consistent with what you know about the setup of your system.
PA	Extensive pre-deployment test that tests the signal path and all major signal processing subsystems. This test may not pass unless the Navigator transducer face is immersed water.	All tests must pass.
PC2	Continuously updates sensor display. Rotate and tilt Navigator and watch the readings on the display change.	Satisfy yourself that the readings make sense.
PC1	Beam continuity test. Follow instructions to rub each beam in turn to generate a noise signal the Navigator uses to verify the transducer beam is connected and operational.	All beams must pass.

9 Compass Calibration

The compass calibration algorithm corrects for the distortions caused by local magnetic fields to give you an accurate measurement. You should be aware of the following items:

- **We recommend against calibrating the Navigator while on a ship/ROV.** The ship's motion and magnetic fields from the hull and engine will likely prevent successful calibration.
- If you think your mounting fixture or frame has some magnetic field or magnetic permeability, calibrate the Navigator inside the fixture. Depending on the strength and complexity of the fixture's field, the calibration procedure may be able to correct it.

NOTE. If you will deploy your Navigator looking up, calibrate it looking up. If you will deploy it looking down, calibrate it looking down.

9.1 Preparing for Calibration

a. Place the Navigator on a piece of strong cardboard on top of a smooth wooden (non-magnetic) table. If a wooden table is not available, place the Navigator on the floor as far away from metal objects as possible.

NOTE. Use the cardboard to rotate the Navigator during calibration—this way you will not scratch the Navigator.

b. Connect the Navigator as shown in "Setup the WorkHorse Navigator ADCP/DVL," page 9.

c. Start *DumbTerm*. See the RDI Tools User's Guide for assistance on using *DumbTerm*.

9.2 Compass Calibration Verification

Compass calibration verification is an automated built-in test that measures how well the compass is calibrated. The procedure measures compass parameters at every 5º of rotation for a full 360º rotation. When it has collected data for all required directions, the Navigator computes and displays the results.

NOTE. Verify the compass if you have just replaced the memory module (optional for Navigators), or any ferrous metals is relocated inside or around the Navigator housing.

a. Start *DumbTerm*. Send a Break to wake up the Navigator.

b. On the **Transfer** menu, click **Command History**. In the **Enter a Command** box, enter **AX** and click **OK**.

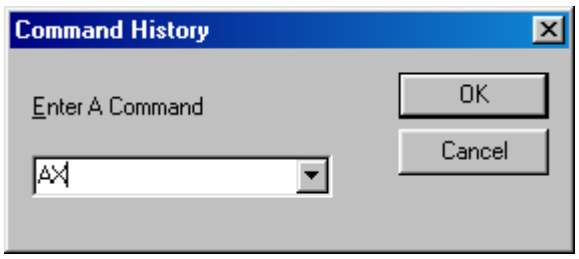

Figure 8. DumbTerm Command History Box

c. **Place the ADCP/DVL in the same orientation as it will be deployed** on a piece of strong cardboard. The Navigator can be vertical (it can rest on its end cap), or it can be tilted (it could rest on a transducer face). Whatever its tilt, the tilt must remain constant as you rotate the ADCP/DVL.

d. When prompted, rotate the Navigator slowly 360 degrees using the cardboard to assist in rotating the ADCP/DVL. Rotate the Navigator smoothly and slowly. Pay particular attention to the Overall Error. For example;

```
HEADING ERROR ESTIMATE FOR THE CURRENT COMPASS CALIBRATION:
   OVERALL ERROR:
      Peak Double + Single Cycle Error (should be < 5():   1.55
   DETAILED ERROR SUMMARY:
      Single Cycle Error:                                  1.54
      Double Cycle Error:                                  0.07
      Largest Double plus Single Cycle Error:              1.61
      RMS of 3rd Order and Higher + Random Error:          0.31
```

If the overall error is less than 5°, the compass does not require alignment. You can align the compass to reduce the overall error even more (if desired).

9.3 Compass Calibration Procedure

The built-in automated compass calibration procedure is similar to the alignment verification, but requires three rotations instead of one. The Navigator uses the first two rotations to compute a new calibration matrix and the third to verify the calibration. It will not accept the new matrix unless the calibration was carried out properly, and it asks you to verify that you want to use the new calibration if it is not as good as the previous calibration. While you are turning the Navigator for the two calibration rotations, the Navigator checks the quality of the previous calibration and displays the results. It compares these results with the results of the third calibration rotation.

There are two compass calibrations to choose from; one only corrects for hard iron while the other corrects for both hard and soft iron characteristics for materials rotating with the ADCP/DVL. Hard iron effects are related to residual magnetic fields and cause single cycle errors while soft iron effects are related to magnetic permeability that distorts the earth's magnetic field and causes double cycle errors. *In general, the hard iron calibration is recommended because the effect of hard iron dominates soft iron.* If a large double cycle error exists, then use the combined hard and soft iron calibration.

a. Start *DumbTerm*. Send a Break to wake up the Navigator.

b. On the **Transfer** menu, click **Command History**. In the **Enter a Command** box, enter **AF** and click **OK**. When the calibration procedure starts, choose the calibration type.

c. Place the ADCP/DVL in the same orientation as it will be deployed on a piece of strong cardboard.

d. When prompted, rotate the Navigator slowly 360 degrees using the cardboard to assist in rotating the ADCP/DVL.

e. The second rotation requires the Navigator to be tilted on an adjacent beam. Follow the on-screen instructions to orient the unit correctly. Tilt an upward-looking Navigator with a block under one side of the end cap. A 35-mm block gives you an 11º tilt. When prompted, rotate the Navigator slowly 360 degrees.

f. If the calibration procedure is successful, it records the new calibration matrix to nonvolatile memory. The Navigator will not change its matrix unless the calibration is properly carried out.

g. If the calibration procedure is not successful, return your Navigator to the original factory calibration, by using the AR-command. Try using the AR-command if you have trouble calibrating your compass. In some circumstances, a defective compass calibration matrix can prevent proper calibration.

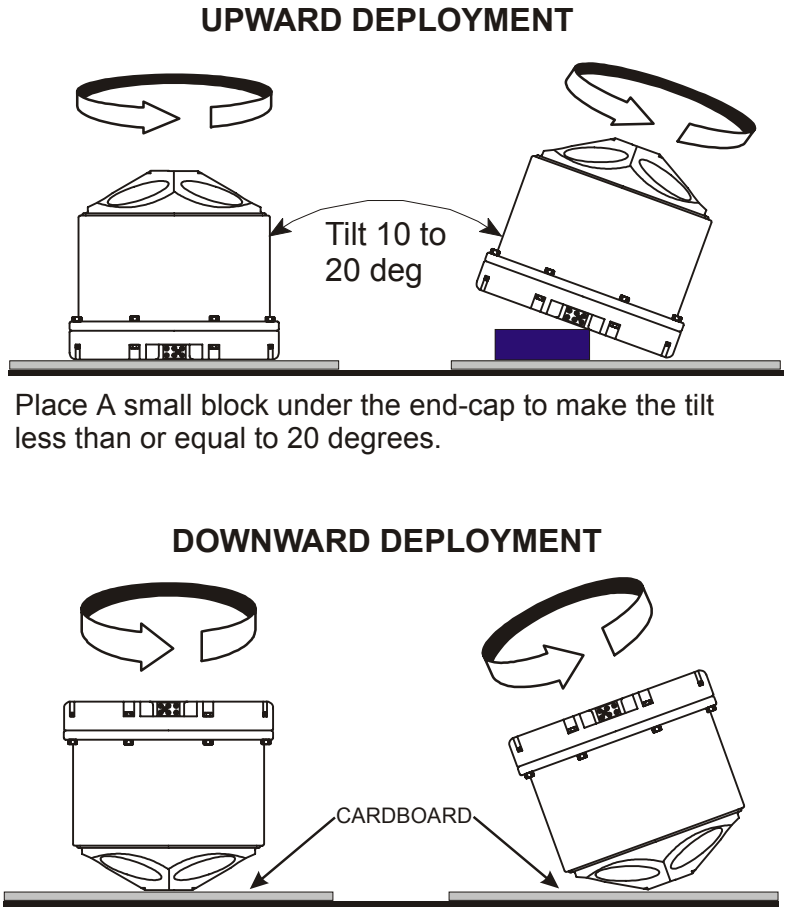

Figure 9. Compass Alignment

NOTE. Use the cardboard to assist in rotating the ADCP/DVL.

10 Internal Pressure Sensor

If you have the optional pressure sensor installed in your ADCP/DVL, use the AZ-command to zero out the pressure sensor at the deployment site.

a. Connect and apply power to the system as described in "Setup the WorkHorse Navigator ADCP/DVL," page 9.

b. Start *DumbTerm* and wakeup the DVL (press the **END** key).

c. Type **AZ** and press the **Return** key.

d. Exit *DumbTerm*.

10.1 Pressure Sensor Maintenance

In order to read the water pressure (depth), water must be able to flow through the copper screw on the pressure sensor. Antifoulant paint will block the sensor's port (a small hole that is drilled through the copper screw). You should tape off the screw during anti-fouling paint application.

This means that the sensor port is not fully protected from bio fouling. The sensor port is surrounded by the antifouling paint, but bio fouling may build up on the screw, and eventually clog the sensor port. However, most organisms do not seem to find the small amount of unpainted surface attractive. If it is logistically possible to periodically inspect/clean the pressure sensor screw, it is highly recommended. This tradeoff situation must be analyzed for individual deployments. Unfortunately, the location of the deployment site usually dictates action in this regard.

NOTE. The pressure sensor is optional. It may not be included on your system.

CAUTION.

The pressure sensor is filled with silicone oil. Never poke a needle or other object through the copper screw while the screw is installed over the pressure sensor. You will perforate the sensor, causing it to fail.

Do not remove the cover disc or attempt to clean the surface of the pressure sensor. The diaphragm is very thin and easy to damage.

Do not remove the pressure sensor. It is not field replaceable.

11 Deployment Guide

Use the following steps and the Quick Reference card to setup the Navigator for a deployment.

11.1 Deployment Checklist

- ❑ Test the ADCP/DVL using *DumbTerm*
- ❑ Seal the ADCP/DVL for deployment
  - ❑ Install new o-rings; use silicone lubricant
  - ❑ Use fresh desiccant (2 bags) inside ADCP/DVL
- ❑ Visually inspect the ADCP/DVL
  - ❑ Check the transducer head condition
  - ❑ Check the zinc anode condition
  - ❑ Check the housing paint condition
  - ❑ All mounting hardware installed
  - ❑ Transducer faces clean and free from defects
- ❑ Verify compass alignment using *DumbTerm*; if necessary, re-calibrate
- ❑ Are biofouling precautions needed?
- ❑ Zero pressure sensor (optional) at deployment site with AZ-command

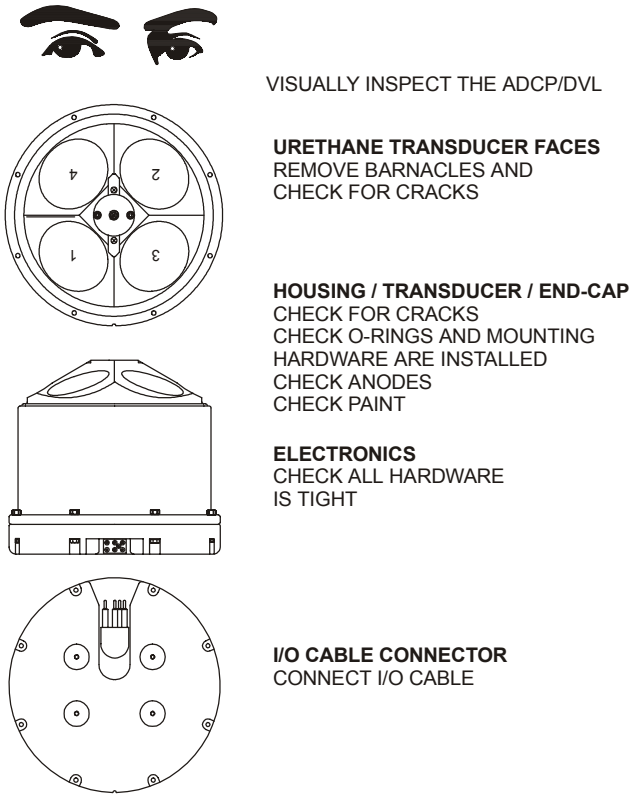

Figure 10. Visual Inspection before Deployment

11.2 Prepare the ADCP/DVL for Deployment

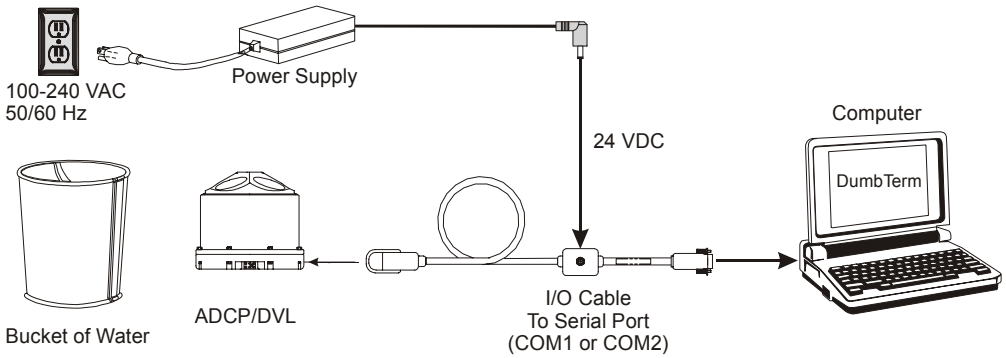

Figure 11. Prepare the ADCP/DVL

Things to remember while preparing the ADCP/DVL.

- Use the Deployment Checklist to verify that the ADCP/DVL is ready for the deployment.
- Test the ADCP/DVL using *DumbTerm*. Some tests will fail if the ADCP/DVL is not placed in water while the tests are being run.
- *Desiccant* lasts a year at specified Navigator deployment depths and temperatures. Remember that desiccant rapidly absorbs moisture from normal room air. Replace the desiccant whenever the Navigator housing or end-cap is removed.
- Verify the compass calibration (see "Compass Calibration Verification," page 16).

11.3 ADCP/DVL Software

Real-Time data collection involves a series of independent steps. Using RDI's Software will ensure that the ADCP/DVL is setup correctly.

- Test your Navigator (*DumbTerm*)
- Plan your deployment (see "Navigator ADCP/DVL Applications," page 1 for what software program to use.)
- Transfer your "plan" into the Navigator and start data collection using the batch file *GO-DVL*
- Display and process your data with *SHIPTRAK*

11.4 Deploy the ADCP/DVL

Figure 12. Real-Time Deployment

Things to remember while deploying the ADCP/DVL.

- For real-time data collection, especially over long cables, you should use a 48 to 60 VDC, 25 W power supply.
- *Tilts*. The Navigator corrects data for tilts as large as 15°, but tilts reduce the effective range and increase the depth of surface contamination.
- *Anti-fouling paint*. You are free to use any anti-fouling paint or other anti-fouling material you wish over any surface of the Navigator. However, you should consider the following:
  1. Ensure that your coating can be used safely on plastic in general and polyurethane specifically.
  2. Apply it thinly and evenly to the transducer faces.
  3. Poorly applied coatings on the transducer could adversely affect instrument performance.
- *Magnetic material*. Keep the Navigator's compass away from magnetic material when you deploy the instrument.

11.5 Send the Deployment Commands

Use the *DumbTerm* program or the batch file *GO-DVL* to send the commands to the ADCP/DVL.

> **NOTE.** Whenever the Navigator pings, an internal beeper makes an audible beep. The beep consumes negligible energy and tells you the Navigator is pinging.

11.5.1 Using DumbTerm to Send a Command File

Use *DumbTerm* to send the commands to the ADCP/DVL only if you are not going to use *SHIPTRAK*. If you are planning on using *SHIPTRAK*, use *GO-DVL* (see "Using the GO-DVL Batch File," page 25).

a. Start *DumbTerm*. To send the command file, press **<F2>**.

b. Select the command file to run from the scroll-down list. If no extension is given for the command file, an extension of .txt is assumed. On the **Files of Type** box, select **All Files (*.*)** if your command file uses a different extension.

> **NOTE.** For help on creating your own command file, see "Creating or Modifying Command Files," page 26.

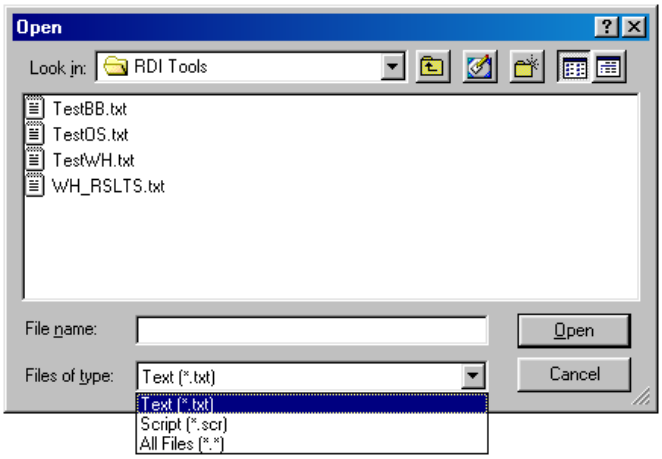

Figure 13. Using DumbTerm to Send the Command File

11.5.2 Using the GO-DVL Batch File

The batch file *GO-DVL* sends the ADCP/DVL the commands from the WHDVL.CMD command file and will help setup the system to collect data.

a. In Windows, open a DOS window by clicking **Start**, **Programs**, **MS-DOS Prompt**.

b. Use the DOS change directory command to change to the directory where the GO-DVL batch file is located. For example, type **cd\whnav** to change to the directory named WHNAV.

c. At the DOS prompt, type *GO-DVL*.

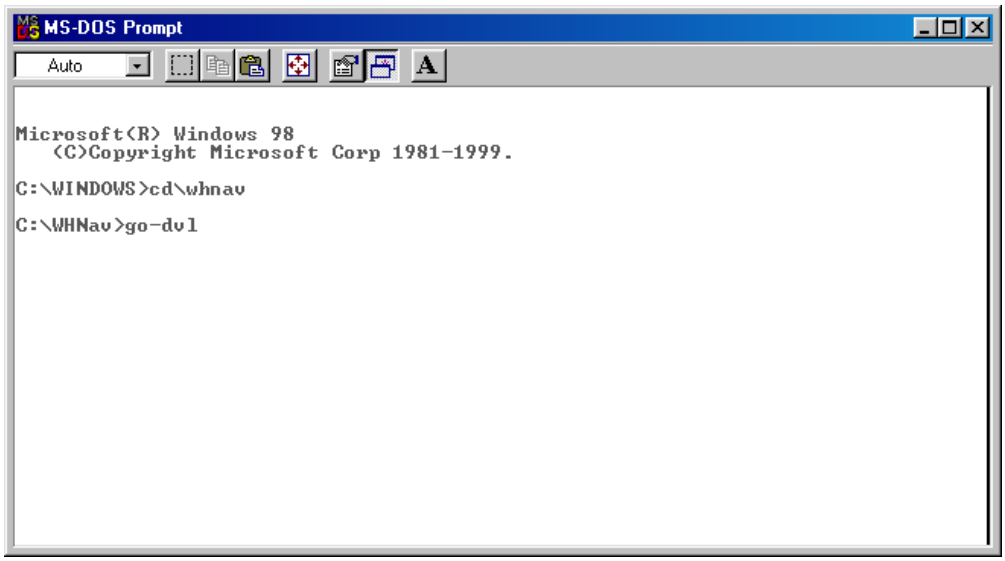

Figure 14. Starting GO-DVL

GO-DVL will wakeup the Navigator, and does the following:

- Sends the commands from the WHDVL.CMD command file.
- Creates a directory on the computer's hard drive named WHDVL.
- *INITADCP* (called by *GO-DVL*) creates an ASCII log file named WHDVL.DLG that contains all of the codes sent to the Navigator, the Navigator hardware settings, and the results of each command. If you see the prompt "INITADCP failed, GO-DVL batch file aborted," view the deployment log file for details of the error.
- Starts the Navigator pinging. You should hear the Navigator "beep" every ping.
- Starts *SHIPTRAK* (collect and view real-time data).

11.5.3 Creating or Modifying Command Files

Command files are simply ASCII files produced by ASCII editors such as *MS-DOS EDIT* or *NotePad*. In general, they contain ASCII characters that are sent out through the serial port.

- If the first character of a line is a semi-colon, then all characters preceding the semi-colon (including the semi-colon) are ignored. This feature is to provide file comments that the user may insert for clarity.
- Use one command per line.

To create your own command file, do the following.

a. Open the WHDVL.CMD command file in *NotePad* or a similar type of text editor.

b. On the **File** menu, click **Save AS**. Give the command file a unique name. For example, name the file WHDVLold.CMD. This will make a backup copy of the WHDVL.CMD file.

c. Open the WHDVL.CMD command file and edit the commands as needed. Refer to the WorkHorse Commands and Output Data Format Guide for detailed information on each command.

NOTE. The default command file has comments that explain the function of each command. It is a good idea to keep the comments and edit them when you make command changes.

The following shows the printout of the default command file WHDVL.CMD.

```
;-----------------------------------------------------------------------\
; ADCP/DVL Command File for use with SHIPTRAK software.
;
; ADCP/DVL type: 1200 Khz Workhorse Navigator
; Setup name:    default
; Setup type:    Bottom Track only
;
; NOTE:  Any line beginning with a semicolon in the first
;        column is treated as a comment and is ignored by
;        the software.
;
; NOTE:  This file is best viewed with a fixed-point font (e.g. courier).
; Modified Last: 25 April 2001
;-----------------------------------------------------------------------/

; Restore factory default settings in the ADCP/DVL
CR1

; Set time between ensembles to zero (ADCP/DVL will ping as fast as possi-
ble)
TE00000000

; Turning off the recorder
CF11110
```

```
; set the data collection baud rate to 9600 bps,
; no parity, one stop bit, 8 data bits
CB411

; Enable single-ping bottom track,
; Set maximum bottom search depth to 50 meters
BP001
BX500

; Disable Water-Mass Layer Mode
BK0

; Set Water-Mass Layer parameters to minimum 4 meters,
; near 6 meters, far 10 meters (1200kHz default).
BL40,60,100

; Set to calculate speed-of-sound, no depth sensor,
; internal heading sensor, use internal tilts, and use
; internal transducer temperature sensor
EZ1111111

; Output ship coordinates, use tilts, allow 3 beam
; solutions and bin mapping
EX10111

; Set heading alignment to 0 degrees
; NOTE.  If the ADCP/DVL is rotated +45 degrees starboard
; (recommended alignment), set EA to EA+45000
EA00000

; Set heading bias to 0 degrees
; NOTE.  Set EB = [(local magnetic declaration)*100] + (-4500)
; to compensate for the transducer misalignment (if used).
EB00000

; Set output data format to PD0
PD0

; Turnkey mode on - ADCP/DVL will ping when power turned on.
CT1

; Save this setup to non-volatile memory in the ADCP/DVL
CK

; Start pinging
CS
```

11.6 Using SHIPTRAK

SHIPTRAK is a ship track display program that accumulates (and transforms, if necessary) bottom track data from a RDI ADCP/DVL using the BroadBand ADCP data format. *SHIPTRAK* may be used for either real-time data collection or playing back recorded data.

To start SHIPTRAK, at the DOS prompt, type one of the following.

Go-DVL	Batch file to start *SHIPTRAK* (Collect real-time data)
SHIPTRAK *filename*	(Review recorded data) where *filename* is the name of the Workhorse Navigator raw data file to be played back.

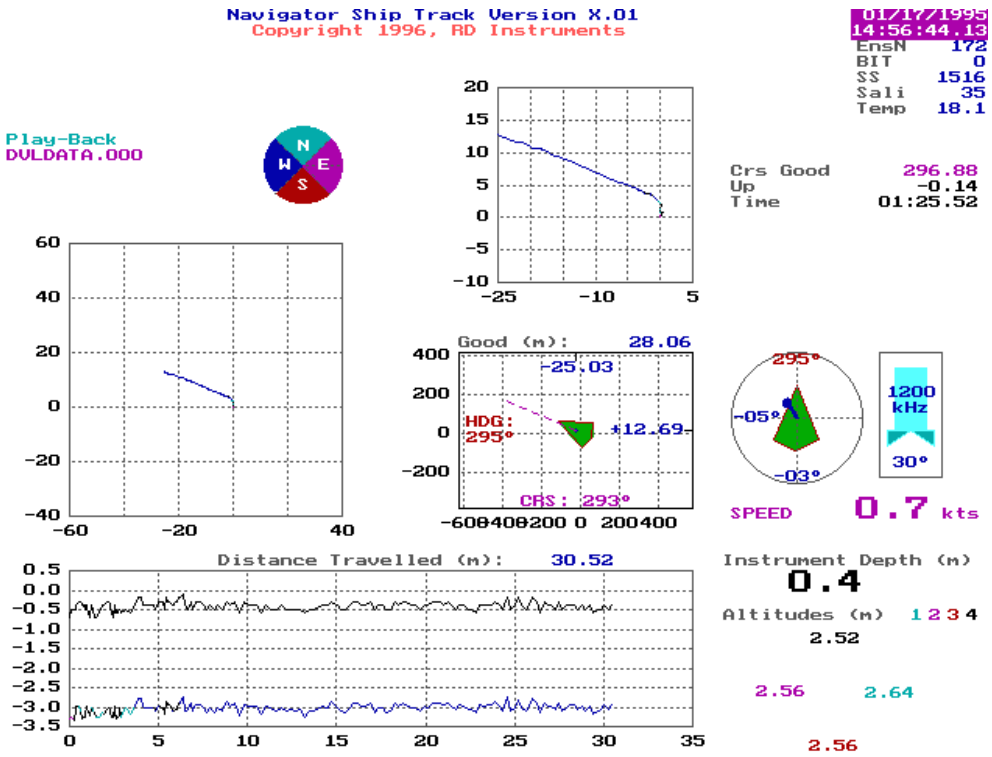

Figure 15. Navigator SHIPTRAK Program Display

11-6.1 SHIPTRAK Commands

General Commands:

Page-Down	Accumulate next ensemble velocity into dead reckoning
Page-Up	Go back to previous ensemble. Clear screens. Does NOT zero distances
C	Zero distances
Home	Go to first ensemble. Zero Distances
0	Accumulate automatically (no pausing)
1	Accumulate automatically (0.5 second pause)
2	Accumulate automatically (1 second pause)

Automatic accumulation occurs until either of the following events occurs.

1. The end of the file is reached
2. A valid keystroke is pressed (**Page-Down**, **Page-Up**, **C**, **Home**)

User defined SHIPTRACK screen (on left side of display)

+ : Zoom into user defined screen (Scale in meters)

– : Zoom out of user defined screen (Scale in meters)

→ : Move graph to the left

← : Move graph to the right

↑ : Move graph down

↓ : Move graph up

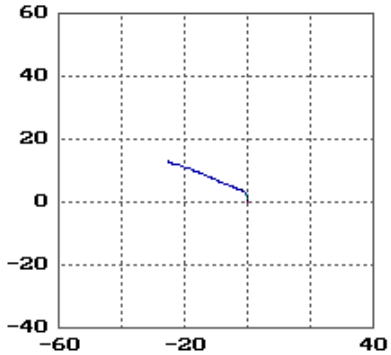

Figure 16. User Defined Screen

Automatic Scaling Shiptrack (middle top side of display)

– : Scale in meters

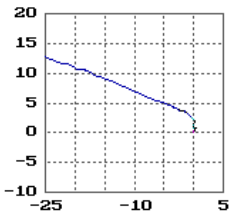

Figure 17. Automatic Scaling Screen

Colors for Shiptracks, and Depths

Red : Northerly Course

Green : Easterly Course

Blue : Southerly Course

Yellow : Westerly Course

Figure 18. Colors for Shiptracks, Depths, and Filename

File name (upper left)

Name of file being played back

Directional Plot (center of display)

"Boat"	The boat points in the direction of the heading. The direction is numerically displayed in blue to the left.
Course	The course is indicated by a green dotted line. The course is numerically displayed on bottom.
East position	The East position (in meters) is numerically displayed on the top of the display.
North position	The North position (in meters) is numerically displayed on the right side of the display.
Good	Distance made good in meters (distance from origin) is numerically displayed above the plot.

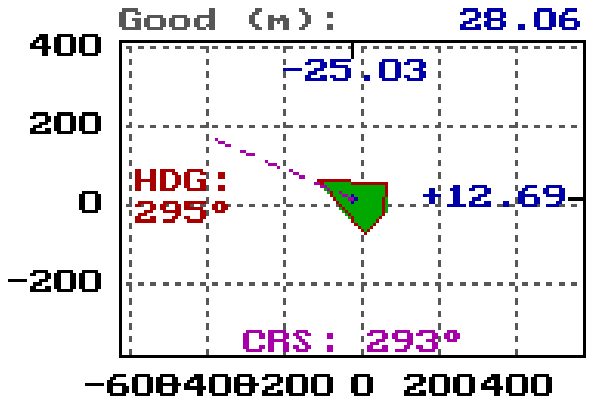

Figure 19. Directional Plot

<u>Altitudes and depth plots</u>

The x-axis of the plot represents total distance traveled.

The y-axis of the plot represents depth in meters.

The white colored graph above indicates ADCP/DVL depth in meters.

The multi-colored graph below indicates average water depth (ADCP/DVL depth + average of good altitudes) in meters.

To the right is the depth numerically (in meters).

Below that are the altitudes as seen by the four beams. These are vertical altitudes corrected with pitch and roll.

The legend corresponds the color with beam number. The altitudes should also be displayed in relative orientation. (i.e., for a convex system, with beam 3 physically forward --> beam 3 is displayed on top) (for a convex system with beam 3 physically forward --> beam 3 is displayed on the bottom).

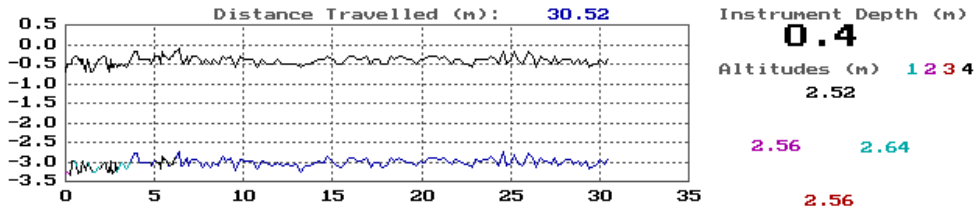

Figure 20. Altitudes and Depth Plot

Orientation Plot (right center)

Heading in degrees (top)

Pitch in degrees (left)

Roll in degrees (bottom)

Mast moves with pitch/roll accordingly

To the right is the ADCP/DVL information: System frequency, transducer head concave/convex, and nominal beam angle

Below is the speed in knots.

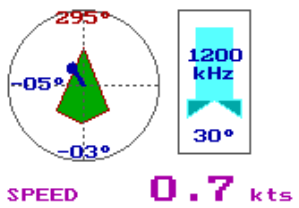

Figure 21. Orientation Plot

Other sensor data (upper right)

Date Time of ensemble

Ensemble number

Built in test result (0 = PASS, see WorkHorse Commands and Output Data Format for details)

Speed of sound in (meters per second)

Salinity in parts per thousand

Temperature in °C

Course made good in degrees.

Total “up” distance traveled.

Time elapsed since last clearing distances.

Figure 22. Other Sensor Data

12 Frequently Asked Questions

12.1 Mounting Questions

How do I mount the ADCP/DVL on my vehicle and where?

The ADCP/DVL should be mounted from the end cap or by a clamp around the body. The mounting surface should be electrically isolated from the ADCP/DVL (i.e. with rubber between the touching surfaces). This is to ensure that the sacrificial anode works on the ADCP/DVL and not the clamps. You should mount the ADCP/DVL as far from any thrusters and motors as possible. The ADCP/DVL should be mounted in a position that allows a clear path for all the beams. Typical mountings would place it at the bottom of the vehicle with the transducer beams slightly outside of the vehicle.

What holes can I use to mount the Navigator?

Dimensions for the bolt holes on the end cap are found in the Navigator Installation Guide, however, it is not clear what holes, if any, can be used for mounting.

300/600kHz – There are four bolt holes on the end-cap/housing assembly that are spaced equally on a 190.5mm diameter circle that is not used to hold anything; they can be used for mounting. The circumference of the circle is 598.47mm and each hole is spaced 149.62mm from each other. The diameter of each hole is 6.8mm.

1200kHz – There are eight bolt holes that are spaced equally on a 178mm diameter circle used to hold the end cap on. This means that the circumference of the circle is 559.2mm and each hole is spaced 69.9mm from each other on that circle. The diameter of each hole is 3.57mm. For mounting, it is recommended that only four of the bolts are removed from the end cap, and use those four bolts for mounting. It is recommended that every other bolt be used. If done that way, then the bolt hole spacing is 139.8mm.

How do I align the ADCP/DVL to my vehicle?

The ADCP/DVL may be mounted with any azimuth orientation of the beams. The most common choices are with beam three forward or alternatively mounted at 45º. RD Instruments provides an optional Alignment jig for this purpose. The EA command can be used to correct for any rotation angle of beam 3 relative to the vehicle axes.

How Should the EA and EB Commands be set?

The vessel's bow, on the vessel's centerline is defined as zero degrees. The ADCP/DVL's internal fluxgate compass will be used for the ADCP/DVL heading source. Using correction commands EA and EB, the ADCP/DVL's internal fluxgate compass will match the heading of the vessel's bow. Beam 3 is set +45 degrees (on the starboard side) from the vessel's bow, on the vessel's centerline. The ADCP/DVL's internal fluxgate compass measures zero degrees when beam 3 is pointing toward magnetic north.

EA+4500 compensates for the transducer misalignment with the vessel's bow. However, it creates a heading bias of 45 degrees. EB-4500 compensates for the heading bias.

You may want to compensate for the local magnetic declination to collect ADCP/DVL data relative to true north. If so, EB = [(local magnetic declaration)*100] + (-4500).

Do I need to align the ADCP/DVL with my vehicle?

If the output of the data is in Earth coordinates then the alignment is not a concern because the internal compass and tilt sensors are tied to the instrument frame.

If however, the output is to be ship relative (i.e. platform X, Y, Z) data, then the exact alignment of the transducer must be known. Beam 3 is the reference for the ADCP/DVL and its alignment to "forward" on the ROV is critical. This angle is sent to the ADCP/DVL through the EA command. The accuracy of this alignment will directly relate to the accuracy in the velocity data.

What is the level and tilt error of the transducer installation?

To answer this question there is another basic question that needs to be answered first. Will the Navigator be used to present X, Y, Z data of the vehicle or will it be used to tell true East, North, and Vertical velocities relative to the earth? Once that question is answered then the installation question can be answered. Here is what I mean.

If the Navigator is being used to measure X, Y, Z components of the vehicle then it is possible to place in offsets in the Navigator to correct for mounting errors. However, we recommend that the transducer be installed to at least 0.5 degrees of vehicle true. Once installed, the true alignment to the frame would have to be measured to as close as possible (typically to 0.01 degrees) and then offsets for both the pitch and roll axis (EP and ER commands) would be entered into the Navigator.

If the Navigator is being used to measure true East, North, and Vertical then the question becomes how will the tilts and heading be measured internally or externally?

If the internal heading, pitch, roll sensors are used then it will measure its relative angle to the earth and correct for it. We would still recommend that the transducer be installed to at least 0.5 degrees of vehicle true.

If external heading, pitch, roll sensors are used then once again the Navigator will output X, Y, Z components and offsets can be used to correct for mounting errors. We recommend that the transducer be installed to at least 0.5 degrees of vehicle true. Once installed the true alignment to the external sensors would have to be measured to as close as possible (typically to 0.01 degrees) and then offsets for both the pitch and roll axis (EP and ER commands) would be entered into the Navigator.

What connector is used on the Navigator?

The I/O connector is LPMBH-7-MP from Impulse. The connector on the cable has to be an LPMIL-7-FS. It has 7 pins: two power lines, five for RS422, or three RS232 and two RS485.

What is the depth rating for my ADCP/DVL?

The standard unit is rated to 2000m with an option for 6000m. Other depth ratings are available on request.

What is the weight of the Navigator ADCP/DVL?

Material	Frequency	Weight in Air	Weight in Water	Working Depth
Titanium	300/600	43.5lbs / 19.8kg	29.6 lbs / 13.5kg	6000m
	1200	21 lbs / 9.5kg	13 lbs / 5.9kg	6000m
Bronze	300/600	81.9 lbs / 32.3kg	68 lbs / 30.9kg	3000m
	1200	37.4 lbs / 17kg	29 lbs / 13.2kg	2000m
Alum. 6061	300/600	27.9 lbs / 12.7kg	14 lbs / 6.4kg	3000m
	1200	14.2 lbs / 6.5kg	6.1 lbs / 2.8kg	2000m
Alum. 7075	300/600	31 lbs / 14.1kg	17 lbs / 7.7kg	6000m
	1200	14.5 lbs / 6.6kg	6.4 lbs / 2.9kg	4000m

What is the minimum height from the transducer face to the acoustic window?

The standard Navigator is a convex transducer. Therefore, moving the transducer close to the window is not really a big deal. Concave transducers can have cross talk between the beams due to reflections off the window. To prevent this cross talk you have to mount them close to the window. The Navigator convex transducers do not have this problem. So, the

transducer should not be closer than 6mm and can be as far from the window as necessary provided the outside edge of the window is greater than the edge of the cup plus the 15-degree cone of silence.

12.2 Electrical Questions

How much power do I need?

The manual suggests that a 25-watt power supply is required. However, the average power drawn by a Navigator pinging at its maximum rate at maximum altitude is 3 Watts for a 1200kHz, 5 Watts for a 600kHz and 16 Watts for a 300kHz. This is based on an input voltage of 32 volts. There is a constant background power consumption of 2.2 watts for the processing electronics as long as the Navigator does not "go to sleep."

The average power consumption depends upon the transmit duty cycle which is a function of many factors. For a Navigator pinging at its maximum rate, the maximum duty cycle is about 13%. By reducing the ping rate, the duty cycle is reduced and therefore overall power consumption may be reduced.

The Navigator contains a 10 mF capacitor, which provides filtering of the high power consumption during transmit. This means that the Navigator should not be adversely affected by reasonable variations in the power supply voltage. It also means that the Navigator should not unduly affect the power supply circuit.

Peak current drawn by the Navigator is never more than 3 amps due to a current limiting circuit that is provided to prevent blowing a 3 amp internal fuse. At start up this translates to 96 Watts at 32V input.

Note that the power supply must be able to provide at least 10 volts continuously at a current draw of 0.4 amps to get the processor started.

When the power is 31V DC, is the ADCP/DVL capable of reaching the 200-meter bottom velocity altitude?

The Navigator system should be powered by 48VDC in the field and use the AC power adapter for in the lab testing.

If you use 31VDC to power the 300kHz ADCP/DVL you will reduce the power by approximately 3dB, resulting in a loss of 6.7% in range.

Is the power line connected to the ground? Is the power floating?

The power is isolated from the communication lines. The chassis is isolated from both of these. There is fuse protection for both input power and the communication lines in case the cable is cut or shorted. There is no protection for user equipment connected on the other end of the cable.

Is the data line floating with respect to ground? Is it Opto isolated?

With respect to power and chassis ground there is complete isolation. Therefore to maintain isolation users should not share data common and power common. Sharing lines defeats the isolation.

In RS232 mode data common to data in is >2.8kohm. In RS422 mode data common is >20kohm except to data out which is >2.8kohm.

Is the communication circuit protected from shorting or over voltage?

The serial line uses thermal fuses that actually open up when they heat and then close again as they cool.

How do I select RS232 or RS422 communication?

An internal switch makes selection of RS232 or RS422 communication. You have to open the system to modify the selection.

12.3 Operational Questions

Which data format should I use and why?

Navigator can output data in several user selectable formats. Output data can be in either hexadecimal-ASCII or binary format. Depending on the output format selected, data will be either binary or ASCII text. All binary output formats have the option of outputting data in HEX-ASCII instead of true binary. HEX-ASCII is an ASCII representation of the binary data. Binary output formats include PD0, 3, 4, and 5. Text output formats include PD6, 11, and 13.

Example of the PD6, format:

:TS,99033123021467,35.0,+13.6, 0.1,1500.0,	Time +…..
:BI, +717, -676, +28, -12,A	Navigator movement relative to the bottom
:BS, +716, -678, -10,A	Ship movement relative to the bottom
:BE, +963, +211, -10,A	Ship movement, East, North, vertical
:BD, +25.51, +2.61, -0.14, 4.19, 2.00	Distance data and range to the bottom
:SA, +5.13, -1.86,304.35	System attitude. (Pitch and Roll)

The ADCP/DVL comes with several different data formats that allow different levels of information. Deciding on which format to use depends on the needs of the vehicle operation. The following describes the basics of the formats available.

The following formats allow the output of bottom track, speed through the water, and current profile data.

PD0 – This is RDI's standard format. PD0 is a binary output format. It provides the most information possible including a header, fixed and variable leader, bottom track, and water profile information. The fixed and variable leader is a recording of time, ADCP/DVL setup, orientation, head-

ing, pitch, roll, temperature, pressure, and self test diagnostic results. Data fields to be output are user selectable.

File Size (If BT Only) is 211 bytes binary

File Size (if water profile included) varies depending on the number of bins selected.

PD3 is a binary output format of bottom track speed over the bottom, speed through the water, range to bottom information, and 16 spare bytes with no definition.

File Size is 40 bytes binary.

PD4 is a binary output format of bottom track speed over the bottom, speed through the water, and range to bottom information only.

File Size is 28 bytes binary.

PD5 is a superset of PD4 and includes information on salinity, depth, pitch, roll, heading, and distance made good.

File Size is 74 bytes binary.

PD6 is a text output format. Data is grouped into separate sentences containing system attitude data, timing and scaling, and speed through the water relative to the instrument, vehicle, and earth. Each sentence contains a unique starting delimiter and comma delimited fields.

PD10 is a binary output format of bottom track speed with respect to the bottom and water reference, and range to bottom information.

File Size is 65 bytes binary.

PD11 is a text output format. It complies with the NMEA 0183 version 2.30 standard.

PD13 is a text output format similar to PD6 with the addition of information about range to bottom and raw pressure sensor data. Information on the format is available on request.

How do I correct for speed of sound?

The Navigator has a built in temperature sensor and optionally a pressure sensor that can be used to aid the speed of sound calculation. Additionally the Navigator may accept the RS485 input of an Applied Microsystems Limited Sound Velocity Smart Sensor (SVSS) to correct for speed of sound. Using the ADCP/DVL in RS232 and accepting the data in RS485 from the SVSS may achieve this. Another option is to fix the Speed of Sound at a standard value for example 1500m/sec, and correct the velocities externally for the correct value.

Can I externally trigger the ADCP/DVL?

There are essentially two methods of triggering the ADCP/DVL.

1. The system can be setup to wait for input before each ping. To setup the ADCP/DVL in this fashion, clear the Auto Ping Cycle bit in the CF command by sending CFx0xxx, where the x's represent the settings of the other parameters. Start the ADCP/DVL pinging with the CS command. The ADCP/DVL will output a '<' before each ping and wait for input. Send any valid ASCII character to trigger the ping. The instrument will not enter sleep mode while it is waiting for the trigger.
2. Using RDS3, The instrument can be setup as a slave. In slave mode, the ADCP/DVL can be commanded to remain awake at all times or it can be allowed to enter sleep mode between pings. If the ADCP/DVL is allowed to sleep, then the latency from trigger to ping (typically 7-8msec) is greatly extended (on the order of 100 msec). To use this you must have the ADCP/DVL configured for RS-232 communications. Set the SM command to slave mode by sending SM2. Start the ADCP/DVL pinging with the CS command. The ADCP/DVL will then wait for a trigger before pinging. Setting the RS-485 lines to a break state for not less than 20 msec sends the trigger.

Can I synchronize with another sensor?

There are currently two ways to synchronize the Navigator with another sensor.

1. Setup the system to ping on command through the RS232 or RS422 serial lines (send a carriage return, a TAB or a CS to ping).
2. Setup the system to be triggered via a short pulse through the RS485 serial lines, (this limits the ADCP/DVL to RS232 communications).

How can I interface with my acoustic positioning system?

The ADCP/DVL communicates via a serial line. The protocol can be either RS232 or RS422. The output of data on this serial line will provide data that can be decoded by your positioning system.

Do I get more data if I increase communications speed?

Typically, ROV users do one ping per ensemble. Therefore, a ping and an ensemble are the same thing. An ensemble should be thought of as two distinct parts: one part which collects bottom track data (i.e. transmits and receives data); and another part that transfers out this information from the serial port.

The collection of the bottom track data varies based on the distance to the bottom. The further off the bottom you are, the longer the ping takes. The time it takes to transfer the data is fixed by the amount of data to be sent and the baud rate. The Navigator can typically collect a bottom track data point and transfer the data once per second at 9600-baud rate.

One way to increase this rate is to speed up the baud rate. A typical ensemble size is 195 bytes for bottom track only. It will take about 0.2 sec to transmit at 9600 Bauds/sec and 0.01 at 115000 bauds/sec.

NOTE. Note, the Navigator will not transmit another ensemble until it has finished the previous ensemble.

What reference system can I use for data (Data coordinate transformation)?

The Navigator can output data in instrument coordinate, ship coordinate or earth coordinate using the internal compass and pitch and roll sensor. Ship coordinates correct for the orientation of the instrument relative to the platform. Earth coordinates correct for magnetic heading as well as tilts.

Does the Navigator output water velocity data?

In standard configuration the Navigator can output a single reference layer of water velocity (Water layer reference). However, it is possible to purchase an upgrade that will enable a firmware option that will collect a profile of the water column.

Can I apply an external time stamp on the data?

The ADCP/DVL has his own real time clock. The ADCP/DVL does not accept a clock input. However, it is possible to periodically set the clock. During clock setting the ADCP/DVL data collection would be momentarily halted.

What interference might I get between the ADCP/DVL and the other acoustic equipment on my vehicle?

Interference from other acoustic devices can cause velocity and direction biases. In extreme cases it the can prevent the ADCP/DVL from operating. However, it is possible to avoid this circumstance. If the other device operating frequency is within 25% of the operating frequency of the ADCP/DVL or is an odd multiple of the ADCP/DVL frequency (e.g. ADCP/DVL is 307,200Hz, then a third harmonic (multiple) of another device would be 100,000Hz) then you may want to make both devices transmit at the same time. By transmitting at the same time the two systems usually do not interfere.

The ADCP/DVL transmits a pulse or series of pulses that contain four carrier cycles. The transmit bandwidth is 25% (Sin χ / χ) and the front end receive bandwidth is determined by the transducer and is 40% about the carrier frequency.

What happens to the ADCP/DVL output if I don't have bottom lock?

For output data formats PD3, PD4, PD5 and PD6 the velocities will go to -32768 when bottom lock is lost. Please note that we have four beams, but only require three beams for a solution. Therefore if we lose one beam we can still calculate a solution. Also, note that the altitude data will go to zero should we lose bottom lock. The ADCP/DVL will continue to operate and report data.

The ADCP/DVL has the capability to track a water reference layer as well as the bottom. This capability allows the user to continue to navigate during limited bottom tracking outages. The BK and BL commands found in the WorkHorse Commands and Output Data Format guide control this facility.

Can I use the ADCP/DVL around offshore structures?

Yes, a ADCP/DVL operated around a structure is OK until the structure actually is illuminated by the sound transmission. Most times a vertical structure that is taller than the depth of the water being measured will not return a signal that can be used for the bottom tracking pulse and so will be ignored. This is because of the angle of incidence to the structure. However, if the structure is not vertical then it can return a signal. As long as the structure is not moving there should be no problems with the received signal during the bottom track detection.

A structure that is illuminated for the water reference layer (or speed through the water layer) will typically be ignored when it interferes with two or less beams. If two beams are ignored by the ADCP/DVL then no data will be collected. However, if the structure interferes with three or four beams then it will cause the ADCP/DVL to measure its speed relative to the structure.

Will the Navigator work in fresh water?

The ADCP/DVL bottom track will work very well in fresh water provided the bottom is within range of the ADCP/DVL. Indeed bottom track range is increased in fresh water. The water reference layer (speed through the water measurement) will not work in fresh water that is completely without suspended sediment. The ADCP/DVL requires that there be objects in the water reflecting its transmitted sound in order for it to make a measurement. Fresh water (drinking water quality) can be too clear for the water reference layer to succeed. The 1200 kHz ADCP/DVL works well in fresh water

lakes and rivers. It is sometimes necessary to set the salinity correctly for speed of sound calibration.

Do sand waves affect my ability to bottom track and measure altitude?

The ADCP/DVL locates and then confirms the bottom by looking for a sharp rise in the returned signal strength. Water typically returns very weak signals compared to the bottom and so this rise is easily detected.

The ADCP/DVL will not necessarily know the difference between the true bottom or a sand wave. Since both will cause a sharp rise in the returned signal. Therefore, the ADCP/DVL will measure the range to bottom as the range to the top (or bottom) of the sand wave. When this happens, the ADCP/DVL will also measure the speed over the bottom as the speed of the vehicle plus the speed of the sand wave.

Will Bottom Tracking be a problem over a pipe?

Depending on how the beams strike the pipe there may be problems. When bottom tracking over a pipe we believe it would be best to have the ADCP/DVL aligned so that beam 3 is forward. This means that 2 beams would be right over the pipe and the spread of the beams should make the other 2 beams hit the bottom. Of course this will depend on the shape of the pipe, size of the pipe, and the distance off the pipe. If the pipe is small or the system is farther off the pipe then beams 1 and 2 would hit the bottom. If the pipe is large or the system is close to the pipe then beams 1 and 2 could be hitting the pipe at an angle causing the signal to be reflected away from the ADCP/DVL.

Can we set up the Navigator to start pinging as soon as the power is turned ON?

The WorkHorse Navigator has turnkey mode enabled by default. That is, you initialize it to your setup. Then when the Navigator is not needed, you power it down. The next time you need it, power it up, and without doing anything else, the unit will start sampling again, just as it was before it was powered down.

The CT1 command enables the auto-start operation and eliminates the necessity for a break signal. The Navigator should be setup with a preferred configuration. Save the preferred configuration with the CK command. Ping the ADCP/DVL and remove power. Install the ADCP/DVL into the AUV. Interconnect power and serial I/O receive circuitry to the ADCP/DVL. The ADCP/DVL will auto start when power is applied. Removing power from the ADCP/DVL will not affect the Navigator setup configuration.

How do I measure distance traveled?

To measure distance traveled over the bottom, it is necessary to resolve the velocity components into earth coordinates and integrate them over time. The most accurate method uses an inertial heading reference and does the coordinate transformations outside of the ADCP/DVL. That is, the ADCP/DVL outputs velocity data in “instrument” or “ship” coordinates. The heading, pitch, and roll (HPR) information from the inertial sensor are then used to perform the transformation of velocity components into earth coordinates in an external computer. The accuracy of our long-term velocity estimates ranges from 0.2% to about 0.5% depending on frequency, beam angle, and beam width of the ADCP/DVL. The overall navigation accuracy also depends upon the HPR sensor and the procedures used in doing the calculations. Quite sophisticated techniques (e.g., Kalman filters) have been developed to optimize this procedure. Johns Hopkins University (Brokloff, 1997) reported a navigation accuracy of 0.16% using a narrow beam Broadband 300 kHz ADCP/DVL (specified at 0.2%) along with a highly accurate inertial heading reference.

A simpler method is to use the ADCP/DVL’s internal HPR sensor and allow the ADCP/DVL to perform the coordinate transformations to earth coordinates. The various Doppler velocity log (ADCP/DVL) output formats (e.g., PD3) include an integration of the earth coordinate velocities to give position offsets from the starting point. The accuracy of the earth coordinate distances will depend heavily on the compass’ accuracy, which is probably about +/-2 degrees with careful calibration. This could result in as much as a 3% cross track error. The “distance traveled,” independent of direction, is independent of the compass error. Therefore, the distance traveled error should be in the 0.2% to 0.5% range depending on the ADCP/DVL system used.

Is the communication baud user programmable or specified at the time of order?

The communication is user selectable from 4800 to 115k baud.

Is there an acceptance test outline or Harbor and sea trial? Are any periphery devices needed?

See the Test Guide or use the SHIPTRAK program and then run the ADCP/DVL with the internal sensors on a known course and compare the distance traveled calculated by SHIPTRAK to the known distance of the run.

12.4 Specification and Accuracy Questions

How do I calibrate my ADCP/DVL?

The only calibration that is required in an ADCP/DVL is the internal heading sensor. This calibration is started through a RDI's *DumbTerm* program and done while the ADCP/DVL is installed in the vehicle. The vehicle will have to be turned a full 360 degrees at two different roll angles.

> **NOTE.** It may not be possible to obtain the roll angles on all vessels. If so, then you will need to calibrate the compass with the Navigator removed from the vessel.

If you are using an external heading reference system (e.g. INS) it may be appropriate to calibrate the combined system against another independent system such as GPS.

Will my vehicle affect the accuracy of the ADCP/DVL compass?

The ADCP/DVL uses a flux gate compass. Flux gate compasses are biased by materials with magnetic properties (such as iron) or by induced magnetic fields (such as motors). It is possible to calibrate out the effects of magnetic materials that do not produce high magnetic fields and remain in a fixed position relative to the ADCP/DVL. Motors and moving magnetic fields cannot be calibrated out.

What are the maximum and minimum altitudes that my ADCP/DVL will operate?

This is different for each frequency. It should be noted that Maximum power output is only achieved at 60vdc input. However, the ADCP/DVL is designed to achieve its specified maximum range (shown below) at 32vdc.

300kHz	Max 200m	Min 1.0m
600kHz	Max 90m	Min 0.7m
1200kHz	Max 30m	Min 0.5m

What are the maximum and minimum speeds that the ADCP/DVL can detect?

Maximum velocity for the Workhorse Navigator is 10m/s with beam 3 pointing forward. However, by rotating the transducer head by 45° this can be increased to 14m/s. RDI can provide custom units capable of detecting higher velocities on request.

Minimum velocity is zero, which allows you to use it for station keeping (hovering). The ADCP/DVL is able to provide high-resolution data at very low velocities when the pulse coherent mode is operating. This occurs

automatically when the ADCP/DVL is at altitudes of less than 4m from the seabed.

What is the maximum rate that I can ping?

Absolute Minimum Time Per Ping = (nominal range) * 1.57ms

Assuming Bottom tracking is single ping per ensemble:

Minimum Ensemble Time = ((total pings per ensemble) * (set time per ping)) + Data Transfer Time

Note: Each ensemble would normally consist of only one bottom track ping for navigation purposes.

Data Transfer Time = ((baud rate)/10) * (number of bytes per ensemble)

Total Pings per ensemble = (total water pings per ensemble) + (total bottom track pings per ensemble)

What is the maximum pulse length?

The pulse length is 30% of the range to bottom. i.e. 30% of 200m = 60m (60*1.57 = 94.2ms)

This pulse length may be modified if necessary. However reductions in pulse length may effect the Navigators ability to reliably bottom track some seabed materials / conditions.

What is the maximum seabed slope that I can still bottom track?

The Navigator is designed to cope with seabed slopes of up to 20º assuming the ADCP/DVL is level.

How accurately can I navigate with my ADCP/DVL?

Specifications are stated on the Navigator Installation Guide. There are two parameters stated for velocity - Precision and Accuracy.

1. The Precision figure is a statement of random error that affects only short-time frame velocity uncertainty, and averages out over longer periods.
2. The Accuracy is the figure, which can be thought of as drift. The Accuracy is a statement of bias, which is not random and will not average out, but will accumulate over time. The Accuracy figure can be interpreted as consisting of two independently varying components, and therefore the maximum error can be expressed as the RMS combination of the two components. Positional error, therefore, is the RMS value of the components of (velocity error * elapsed time).

For the 300kHz, velocity accuracy is +/- 0.4% +/- 0.2cm/sec. This is a conservative figure.

This figure translates as follows:

For a particular length of time, e.g.: 1 hour, at a particular velocity, e.g.: 100cm/s, the drift will be a maximum of (0.4% * velocity * time) +/- (0.2cm/sec * elapsed time).

Thus, the total error = RMS (0.4% * 100cm/s * 3600 sec) +/- (0.2cm/s * 3600sec) = (((14.4m)^2) + ((7.2m)^2))) ^ 1/2 = 16.1m, maximum.

For a particular distance, e.g.: 1km, at a particular velocity, e.g.: 100cm/s, the drift will be a maximum of (0.4% * 100cm/s * (distance traveled /average velocity)) +/- ((0.2cm/sec)* (distance traveled /average velocity)).

Thus, the total error = RMS (0.4cm/s * (1km/100cm/s)) +/- (0.2cm/s * (1km / 100cm/s)) = (((4m)^2) + ((2m)^2))) ^ 1/2 = 4.47m, maximum.

The answers are consistent because traveling 1km @ 100cm/s requires only 1000 seconds, so the positional error is proportionally smaller than the one-hour error.

What is the influence of the temperature to Maximum Altitude?

On the brochure, the Maximum Altitude is specified at 5 degree. If the temperature around transducer varies from 5 to 15 degrees, how does the Maximum Altitude vary?

The maximum altitude is also based on a salinity of 35ppt. If we hold the salinity constant at 35 and then just vary the temperature then the following changes result:

300kHz

- Going from 5 to 10 degrees C the range is reduced by 7.4%
- Going from 10 to 15 degrees C the range is reduced by 11.6%

1200kHz

- Going from 5 to 10 degrees C the range is increased by 115%
- Going from 10 to 15 degrees C the range is increased by 106%

Leaving the temperature at 5 degrees C and changing the salinity will give the following results:

300kHz

- Going from 35ppt to 0ppt the range is increased by 160%

1200kHz

- Going from 35ppt to 0ppt the range is increased by 103%

What is the velocity range and velocity accuracy of ADCP/DVL in Z-direction (vertical)?

We assume that the velocity range of the vehicle is up to 5m/s and bottom velocity accuracy is +/-0.4%+/-0.2cm/s. The brochure refers to X-Y dimension. The velocity range of the ADCP/DVL is actually +/- 10m/sec for either the horizontal or vertical measurement. However, you cannot go 10m/sec in both the horizontal and vertical component at once. There should be no problem in going at 5m/sec in both directions at once. .

What is the beam width?

The beam width is roughly 1.4 degrees for the 1200kHz, 2.0 degrees for the 600kHz, and 3.9 degrees for the 300kHz.

What are the acoustic source levels for the Workhorse Navigator ADCP/DVL?

The general formula for source level is:

SL = 170.8 + DI + 10*Log10(Acoustic Power).

For our systems, DI = 20*Log10(pi*Diameter/wavelength).

Acoustic Power = Electrical Power * Transducer Efficiency

Below is a table of these values.

Freq. (Nom.)	Freq.(Actual)	Bandwidth	XDCR Dia. (mm)	Pelec (watts)	Efficiency (%)	SL	Beam width (Deg.) (1 way)
300	307	76.75	73	25	65.00%	216.3	3.9
600	614	153.5	73	8	60.00%	217.1	2.0
1200	1229	307.25	51	3	40.00%	214.0	1.4

Frequencies & Bandwidths in kHz.

SL in dB re 1 uPa@1m

NOTE. -3dB bandwidths are 25% of center frequencies

13 Technical Support

If you have technical problems with your instrument, contact our field service group in any of the following ways:

RD Instruments	RD Instruments Europe
9855 Businesspark Ave.	5 Avenue Hector Pintus
San Diego, California 92131	06610 La Gaude, France
(858) 693-1178	+33(0) 492-110-930
FAX (858) 695-1459	+33(0) 492-110-931
Sales - rdi@rdinstruments.com	rdi@rdieurope.com
Field Service - rdifs@rdinstruments.com	rdifs@rdieurope.com

Web: www.rdinstruments.com

www.dvlnav.com